Itahydraulic
Power Tecnology

PVB Piston Pumps

- Same Day Shipments of Units or Part Orders
- Interchangeable Parts
- Fully Tested

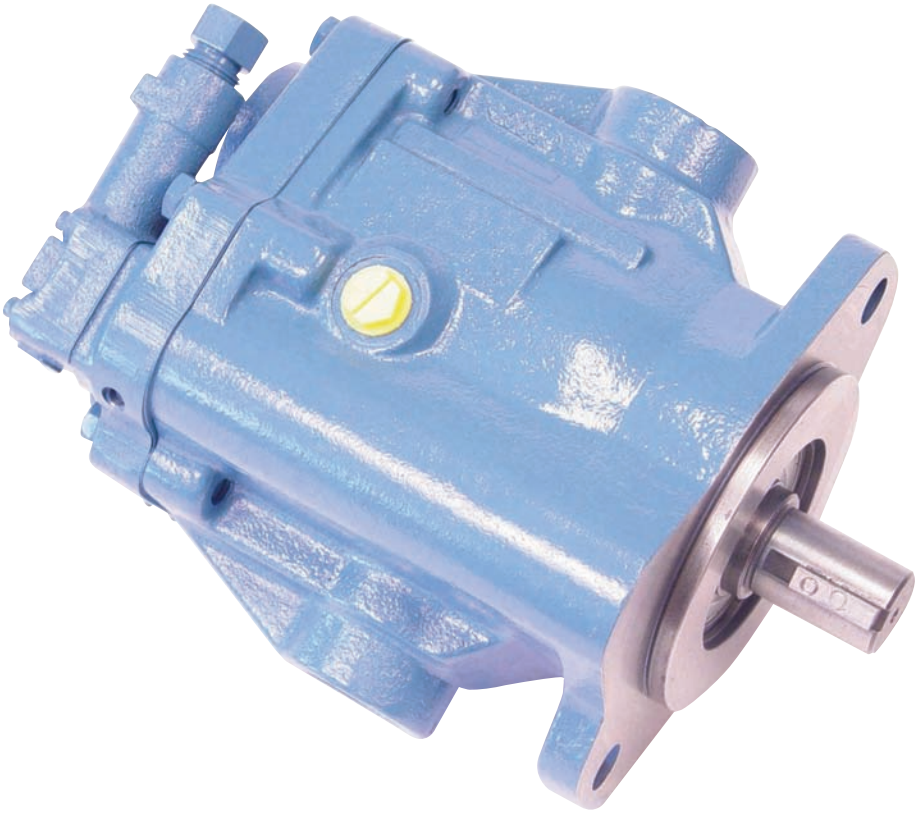

7223 NW 43rd St, DPT 2254 Choice, Miami, FL-33166

Itahydraulic
Power Tecnology

Contents

Basic characteristics . . . 3
General Description . . . 3
Functional symbols . . . 3
Model Codes . . . 4
Operating data . . . 5
Minimum Inlet Pressure Curves . . . 5–6
Performance data @ 1500 r/min drive speed:
- PFB5, PFB10, PFB20 . . . 7
- PVB5, PVB6, PVB10 . . . 8
- PVB15, PVB20, PVB29 . . . 9
- PVB45,PVB90 . . . 10

Performance data @ 1800 r/min drive speed:
- PFB5, PFB10, PFB20 . . . 11
- PVB5, PVB6, PVB10 . . . 12
- PVB15, PVB20, PVB29 . . . 13
- PVB45, PVB90 . . . 14

Control data for PVB pumps . . . 15
Noise levels . . . 16
Installation data
- PFB5 SAE flange mounting . . . 17
- PFB10 SAE flange mounting . . . 18
- PFB20 SAE flange mounting . . . 19
- PVB5/6 SAE flange mounting C & CM pressure compensator controls . . . 20
- PVB5/6 side ported thru shaft . . . 21
- PVB10/15 SAE flange mounting C & CM pressure compensator control . . . 22
- PVB10/15 side ported thru shaft . . . 23
- PVB5/6 & PVB10/15 M lever control, & H handwheel control . . . 24
- PVB20/29 SAE flange mounting C & CM pressure compensator control . . . 25
- PVB20/29 side ported thru shaft . . . 26
- PVB45 flanged mounted . . . 27
- PVB45 foot mounted . . . 28
- PVB90 . . . 29
- PVB5/6, PVB10/15 & PVB20/29 CC & CMC press. compensator and adj. max. displacement stop . . . 30
- PVB5 – 29 CG Remote control compensator, CVP Load sensing & –S30 drain port option . . . 31
- PVB5/6, PVB10/15, PVB20/29 DIN/ISO models . . . 32

Installation data . . . 33

Itahydraulic
Power Tecnology

Basic Characteristics

Type . . . . . Axial piston pumps
Operating pressure . . . . . up to 210 bar (3000 psi)
Displacement . . . . . 10,5 to 197,5 cm^3/r (0.64 to 12 in^3/r)
Drive speed . . . . . up to 3600 r/min

General Description

Variable displacement models make up this range of axial piston pumps. Their high performance ratings and efficiencies are achieved with a variety of hydraulic fluids. Fixed displacement models are noted for their volumetric and mechanical efficiencies. Variable displacement models can closely match pressure and/or flow demand with a control selected from:

- Pressure compensator with or without a remote control facility.
- Pressure compensator with adjustable displacement control.
- Load sensing compensator.
- Mechanical (lever) control.
- Handwheel control

Typical Section

Variable displacement model with compensator control “C” or “CM”

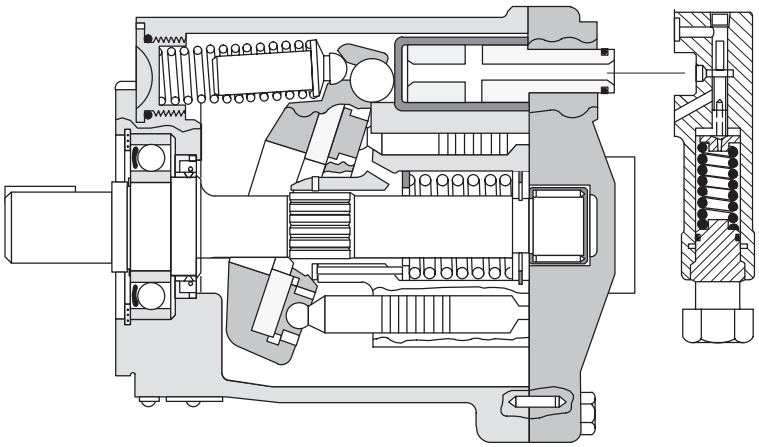

Functional Symbols

PVB
Variable displacement models

With handwheel, or lever.

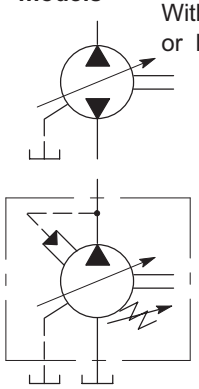

With pressure compensator (C or CM) (simplified symbol)

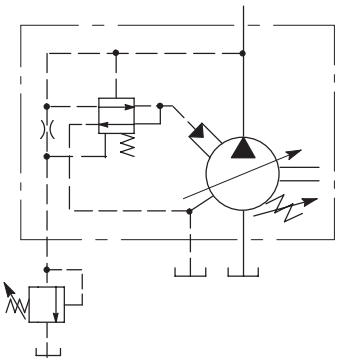

With pressure compensator arranged for remote control C(M)G (detailed symbol)

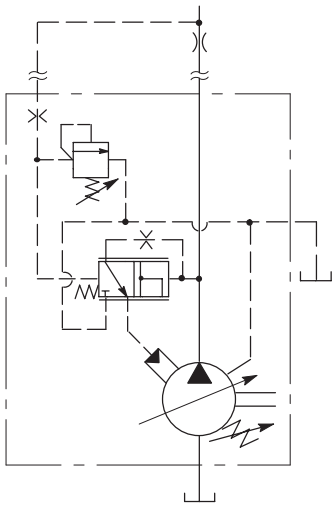

With CVP load sensing and pressure limiter

Itahydraulic
Power Tecnology

Model Codes

P * B * -* * R S (F)(W)(*)-** -** -(C)-(G)-(L)-** -****

1 2 3 4 5 6 7 8 9 10 11 12 13 14 15 16

1 Basic models

F = Fixed displacement type
V = Variable displacement type

2 Displacement

PFB and PVB models:
5 = 10,55 cm^3/r (0.64 in^3/r)
10 = 21,10 cm^3/r (1.29 in^3/r)
20 = 42,80 cm^3/r (2.61 in^3/r)
PVB models only:
6 = 13,81 cm^3/r (0.84 in^3/r)
15 = 33,00 cm^3/r (2.01 in^3/r)
29 = 61,60 cm^3/r (3.76 in^3/r)
45 = 94,50 cm^3/r (5.76 in^3/r)
90 = 197,50 cm^3/r (12.0 in^3/r)

3 Foot mounting option

F = Foot mounting option for PVB45, PVB90 models.
Omit for flange mounting.
***Note**. For foot mounting brackets. for other models see bottom of page.*

4 Mounting flange

M = Metric, to DIN/ISO 3019, Part 2 and VDMA 24560, Part 1
Omit for SAE mounting flange

5 Shaft rotation

Viewed at shaft end
R = Clockwise
L = Anticlockwise (not avalable for PFB10 and PFB20)

6 Displacement zone

PVB models only.
S = One side of center (pressure compensated models only)
D = Both sides of center (Handwheel and lever controlled models only)
Omit for PFB models.

7 Flanged main ports

F = PVB45 & PVB90 models only.
Omit for P*B5 to 29 inclusive.

8 Thru shaft & side ported option

PVB5 to 29 only:
W = with side entry ports
X = thru shaft with side entry ports

9 Shaft type

N = Metric, to DIN/ISO 3019, Part 2 and VDMA 24560, Part 1
Y = SAE models P*B5 to 15 only.
Omit for 20 thru 90 models

10 Pump design number

10 = PFB20
30 = PFB10
31 = PVB10 and PBV15
20 = all other models

11 Displacement control options

PVB models only.
C = Pressure compensator. Pressure adjustment range:
PVB90: 19 to 210 bar (275 to 3000 psi)
All other models: 17 to 210 bar (250 to 3000 psi)
Also used as prefix for item 12
***Note**. For PVB6, 15 and 29 models, user must ensure that the max. pressure setting never exceeds 140 or 100 bar (2000 or 1500 psi) dependent on the type of fluid being used.*

CM = Pressure compensator. Option for all sizes except PVB90. Pressure adjustment range:
PVB45: 10 to 100 bar (150 to 1500 psi)
All other sizes: (17 to 100 bar (250 to 1500 psi)
CVP = Load sensing with pressure limiter.

PVB5 to 15 only:
H = Handwheel control
M = Lever control
V = No control (As for "M" type but without lever.)
Omit for PFB models.

12 Maximum displacement adjustment

PVB5 to 29 models only:
C = "C" or "CM"compensator, and with 12
Omit when not required.

13 Pressure compensator variations

PVB5 to 29 models only:
G = Remotely adjustable pressure setting.
Omit when not required.

14 Control location

PVB5 to 15 models with "H", "M" or "V" controls only:
L = Left hand, when viewed at shaft end.
Omit for right hand, or when a pressure compensator is fitted.

15 Control design number

PVB models only.
10 = "H" and "M"controls; also "C" control for PVB90
11 = "C" and "CM" controls.
12 = "CVP" control.
20 = "CG" control.

16 Special design options

S124 = splined shaft (see below)
PVB5/6 - 5/8"- 9 tooth
PVB10/15 - 7/8" - 13 tooth
PVB20/29 - 1 1/4" - 14 tooth

For PFB5 and PVB5 to 29 only:.
S.30 = Extra drain port to permit vertical "shaft-up" installation.

For PVB5 to PVB29 pressure compensated models only:
GE1 = 10% minimum displacement. when pressure compensated.

Omit when not required.

Foot bracket mounting kits

Order separately if required. Kits include pump fixing bolts.

Model code	Part number	For pump sizes:
FB-A-10	422582	PVB5/6
FB-B-10	422583	P*B10/15, PFB20
FB-C-10	422584	PVB20/29

Operating Data

Pressure and Speed Limits

Basic model designation	Geometric displacement, cm³/r (in³/r)	Maximum shaft speed (r/min)			Maximum outlet pressure, bar (psi)		
		Anti-wear hydraulic oil	Water-in–oil emulsion (40%/60%)	Water-glycol	Anti–wear hydraulic oil	Water glycol	Water-in–oil emulsion (40%/60%)
PFB5	10,55 (0.64)	3600			210 (3000)		
PFB10	21,10 (1.29)	3200	1800	1800	210 (3000)	175 (2500)	175 (2500)
PFB20	42,80 (2.61)	2400			175(2500)		
PVB5	10,55 (0.64)				210 (3000)	140 (2000)	140 (2000)
PVB6	13,81 (0.84)				140 (2000)	100 (1500)	100 (1500)
PVB10	21,10 (1.29)				210 (3000)	140 (2000)	140 (2000)
PVB15	33,00 (2.01)	1800	1800	1800	140 (2000)	100 (1500)	100 (1500)
PVB20	42,80 (2.61)				210 (3000)	140 (2000)	140 (2000)
PVB29	61,60 (3.76)				140 (2000)	100 (1500)	100 (1500)
PVB45	94,50 (5.76)				210 (3000)	140 (2000)	140 (2000)
PVB90	197,50 (12.0)	1800	1200	1200	210 (3000)	140 (2000)	140 (2000)

Maximum Inlet Pressure

All pumps except PVB5/6/10/15 with H, M or V controls . . . . . 1,0 bar (15 psi)
PVB5/6/10/15 with H, M or V controls . . . . . As “Max. outlet pressure” above for appropriate size.

Case Drain Pressure

See “Installation data” section, on page A.33.

Minimum Inlet Pressure

See following graphs.
Based on oil viscosity of 21 cSt (102 SUS) and at 50°C (120°F).

PFB5 and PVB5

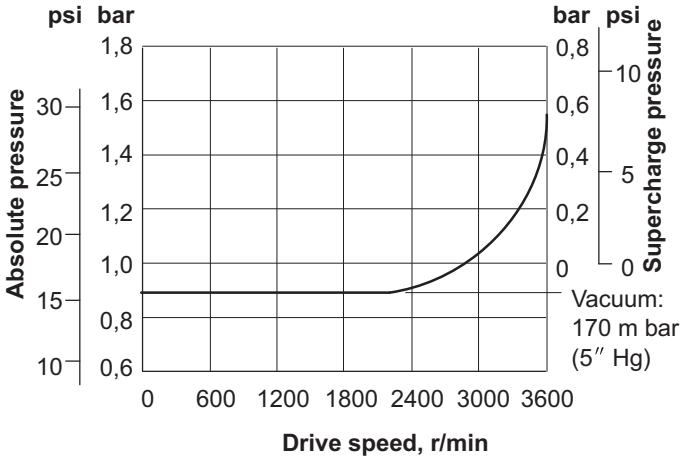

PVB6

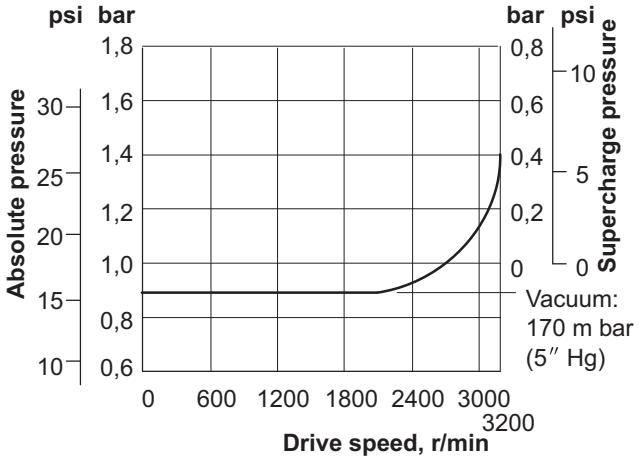

Operating Data Minimum Inlet Pressure (cont'd)

PFB10 and PVB10

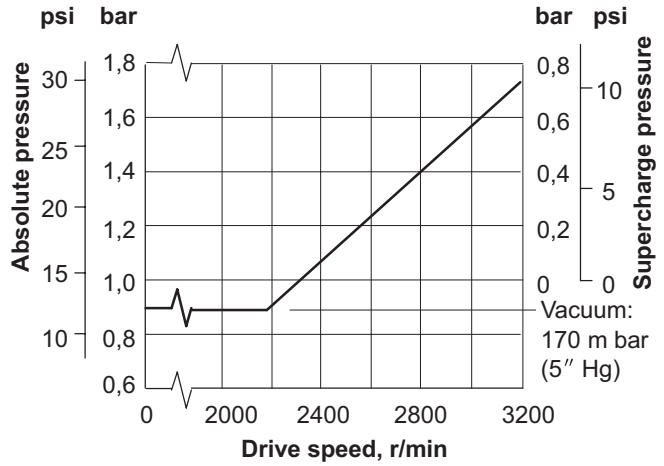

PVB15

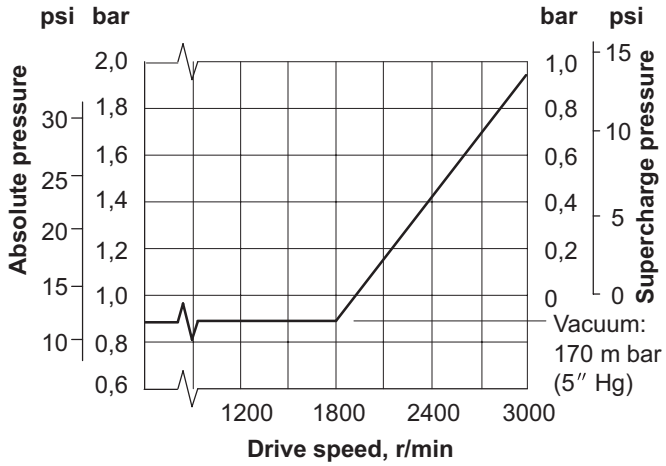

PFB20

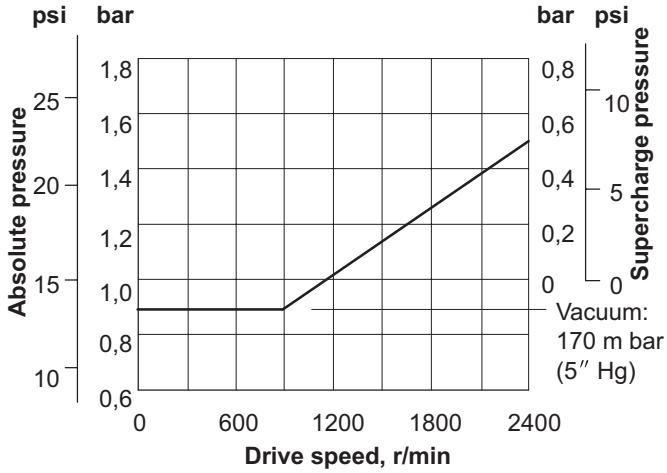

PVB20 and PVB29

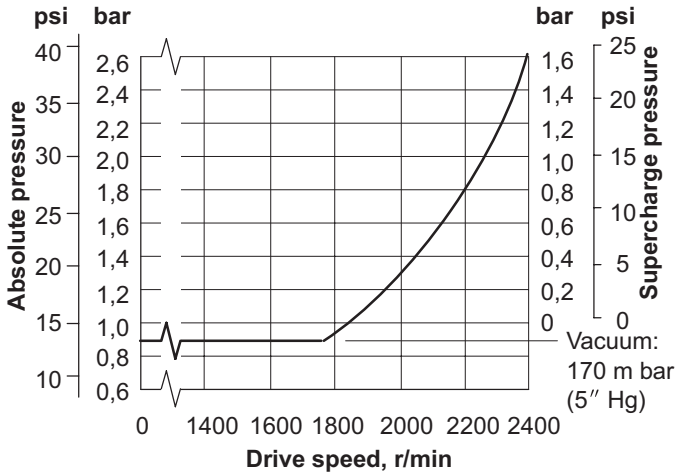

PVB45

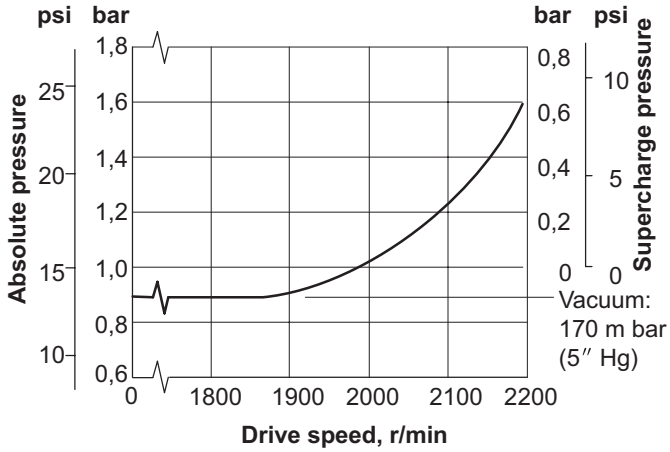

PVB90

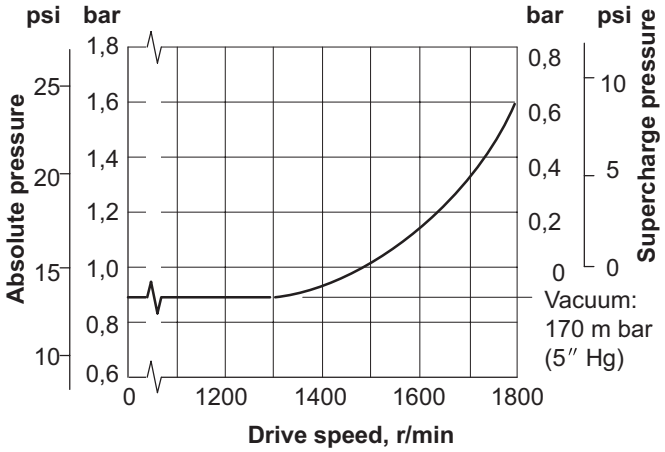

Performance Data at 1500 r/min Drive Speed

With oil at 21cSt (102 SUS) and at 49°C (120°F): Atmospheric inlet
For data at drive speed of 1800 r/min, see pages A.11 to A.14

PFB5

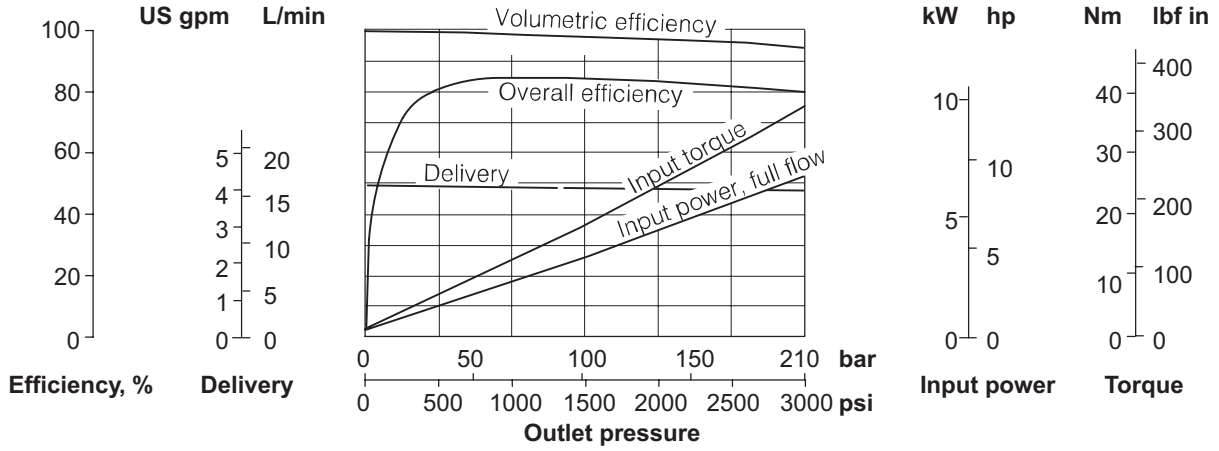

PFB10

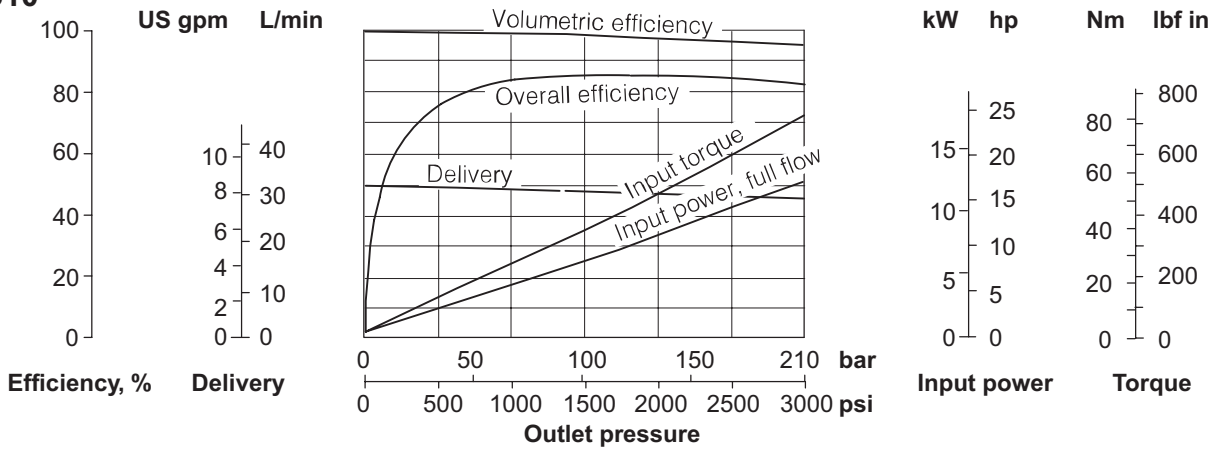

PFB20

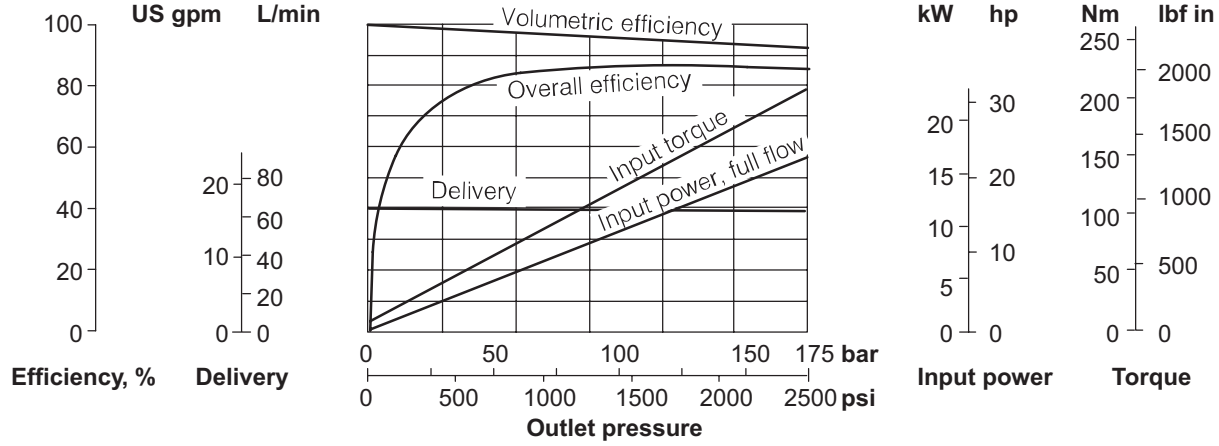

Performance Data at 1500 r/min Drive Speed (cont'd)

With oil at 21cSt (102 SUS) and at 49°C (120°F): Atmospheric inlet
For data at drive speed of 1800 r/min, see pages A.11 to A.14

PVB5

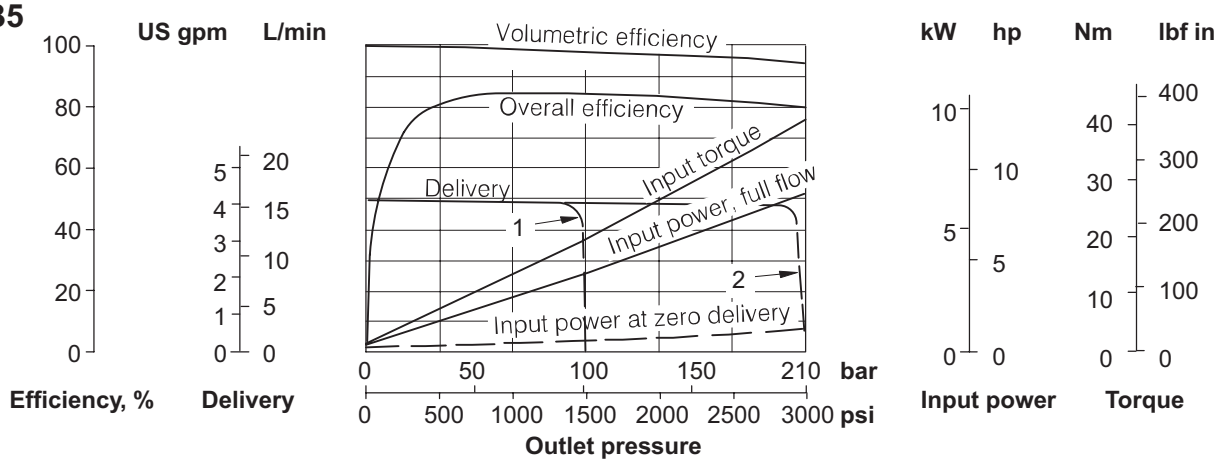

1 = Delivery with compensator setting of 100 bar (1500 psi)
2 = Delivery with compensator setting of 200 bar (3000 psi)

PVB6

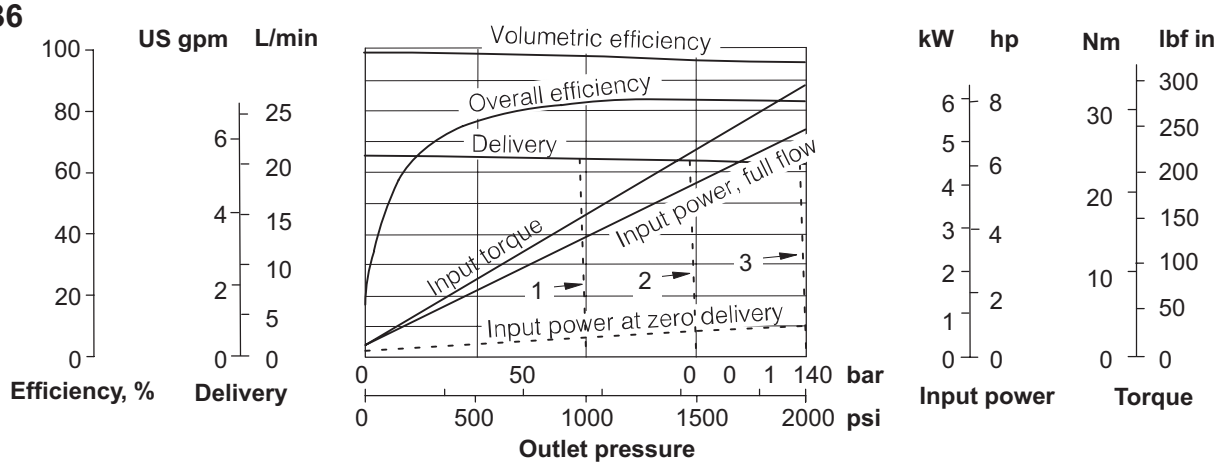

1 = Delivery with compensator setting of 70 bar (1000 psi)
2 = Delivery with compensator setting of 100 bar (1500 psi)
3 = Delivery with compensator setting of 140 bar (2000 psi)

PVB10

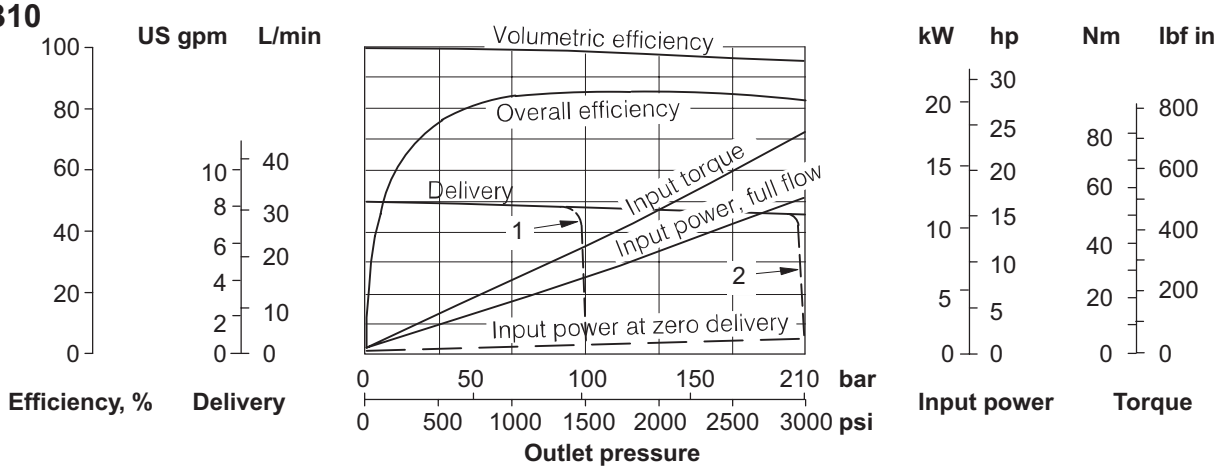

1 = Delivery with compensator setting of 100 bar (1500 psi)
2 = Delivery with compensator setting of 200 bar (3000 psi)

Performance Data at 1500 r/min Drive Speed (cont'd)

With oil at 21cSt (102 SUS) and at 49°C (120°F): Atmospheric inlet
For data at drive speed of 1800 r/min, see pages A.11 to A.14

PVB15

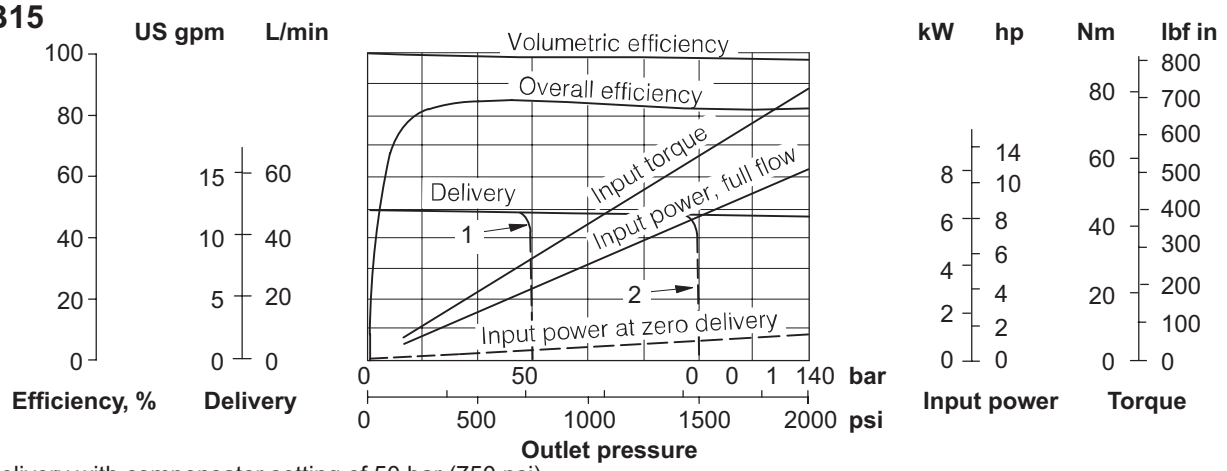

1 = Delivery with compensator setting of 50 bar (750 psi)
2 = Delivery with compensator setting of 100 bar (1500 psi)

PVB20

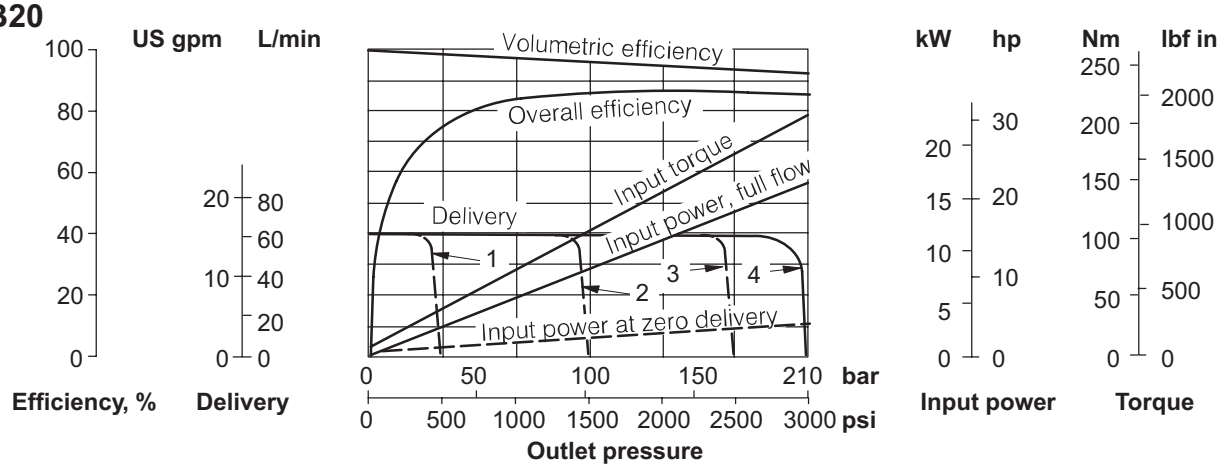

1 = Delivery with compensator setting of 35 bar (500 psi)
2 = Delivery with compensator setting of 100 bar (1500 psi)
3 = Delivery with compensator setting of 175 bar (2500 psi)
4 = Delivery with compensator setting of 200 bar (3000 psi)

PVB29

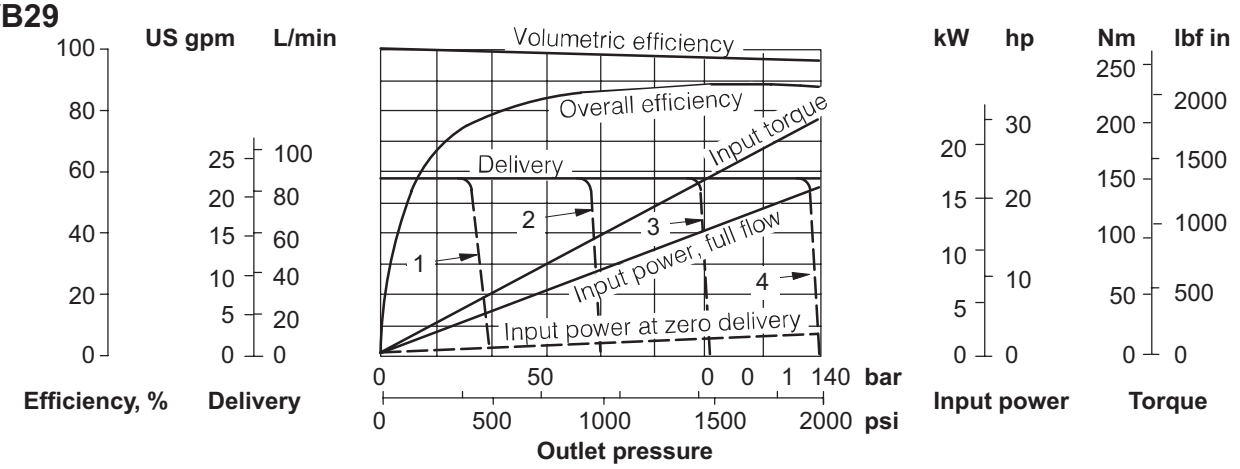

1 = Delivery with compensator setting of 35 bar (500 psi)
2 = Delivery with compensator setting of 100 bar (1500 psi)
3 = Delivery with compensator setting of 175 bar (2500 psi)
4 = Delivery with compensator setting of 200 bar (3000 psi)

Performance Data at 1500 r/min Drive Speed (cont'd)

With oil at 21cSt (102 SUS) and at 49°C (120°F): Atmospheric inlet
For data at drive speed of 1800 r/min, see pages A.11 to A.14

PVB45

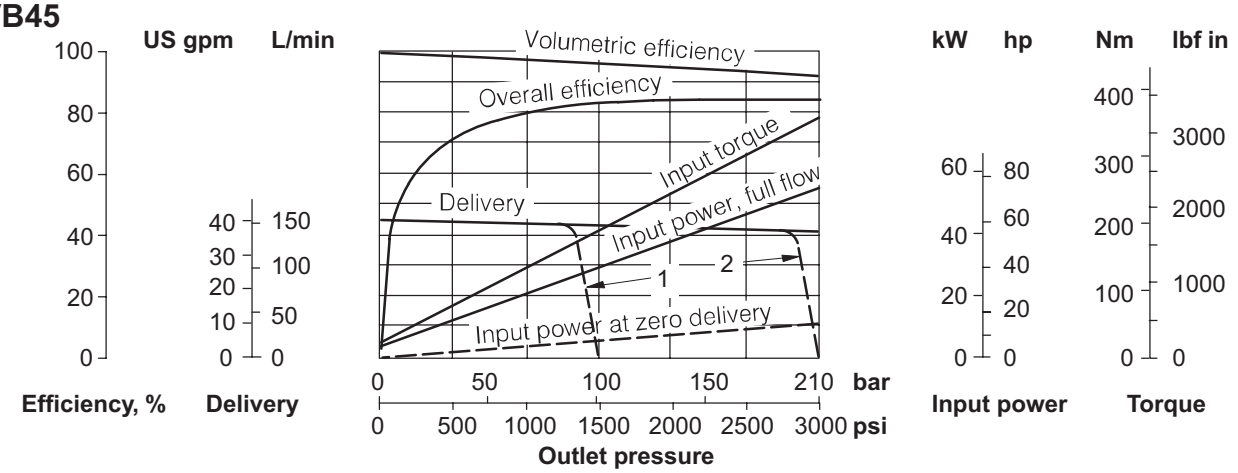

1 = Delivery with compensator setting of 100 bar (1500 psi)
2 = Delivery with compensator setting of 200 bar (3000 psi)

PVB90

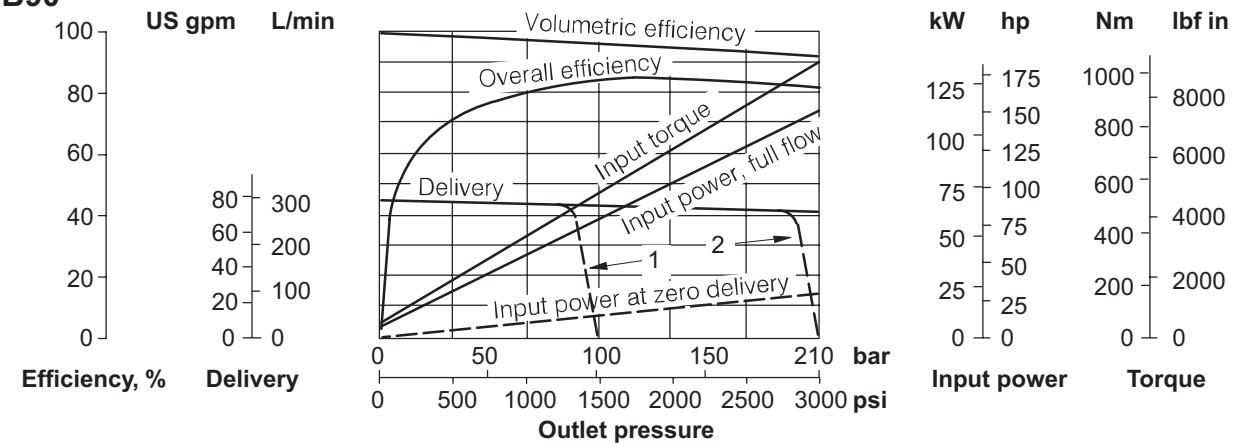

1 = Delivery with compensator setting of 100 bar (1500 psi)
2 = Delivery with compensator setting of 200 bar (3000 psi)

With oil at 21cSt (102 SUS) and at 49°C (120°F): Atmospheric inlet
For data at drive speed of 1500 r/min, see pages A.7 to A.10

PFB5

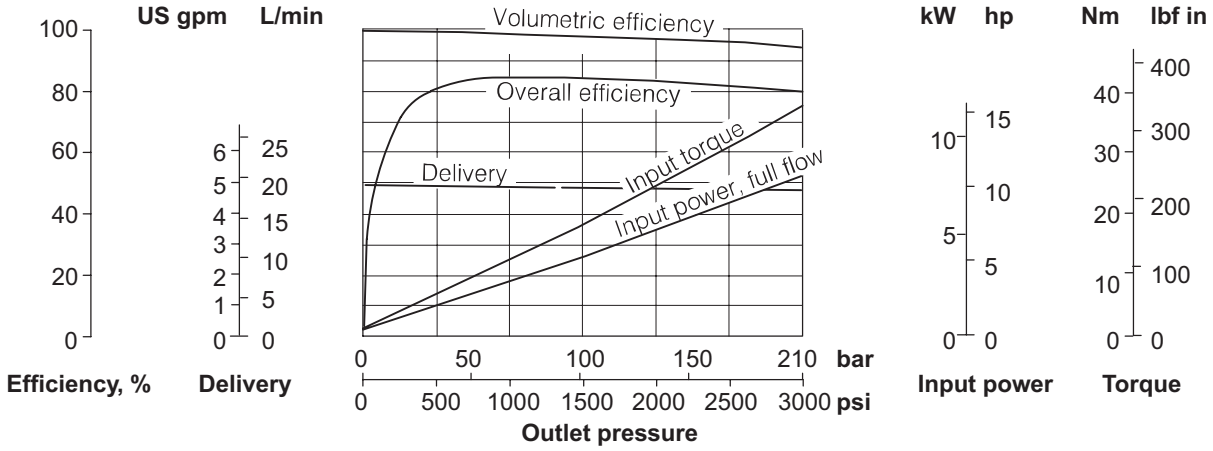

PFB10

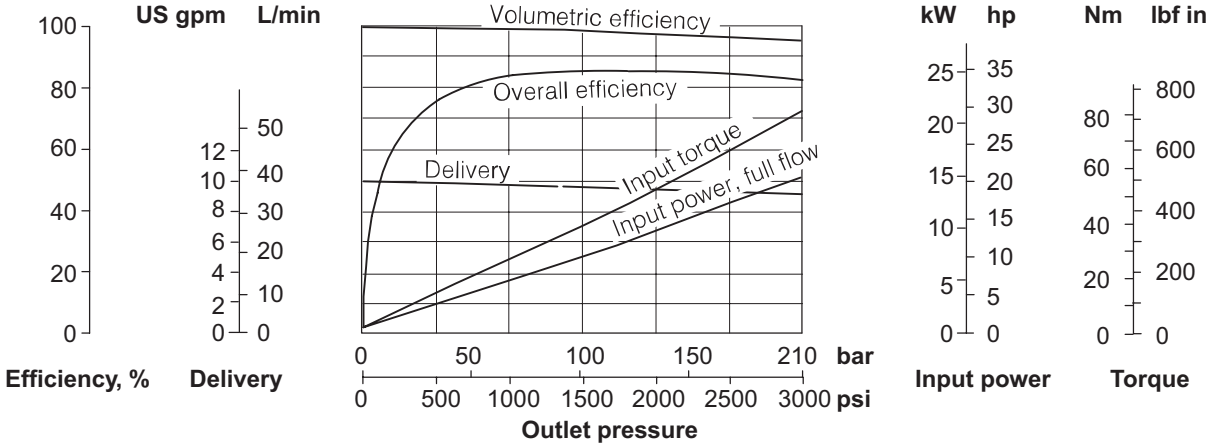

PFB20

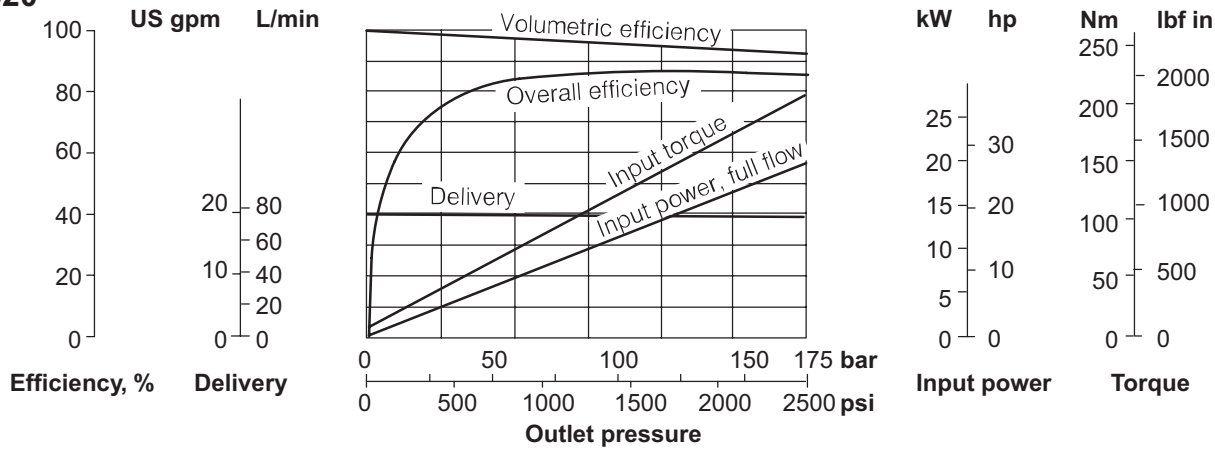

Performance Data at 1800 r/min Drive Speed (cont'd)

With oil at 21cSt (102 SUS) and at 49°C (120°F): Atmospheric inlet
For data at drive speed of 1500 r/min, see pages A.7 to A.10

PVB5

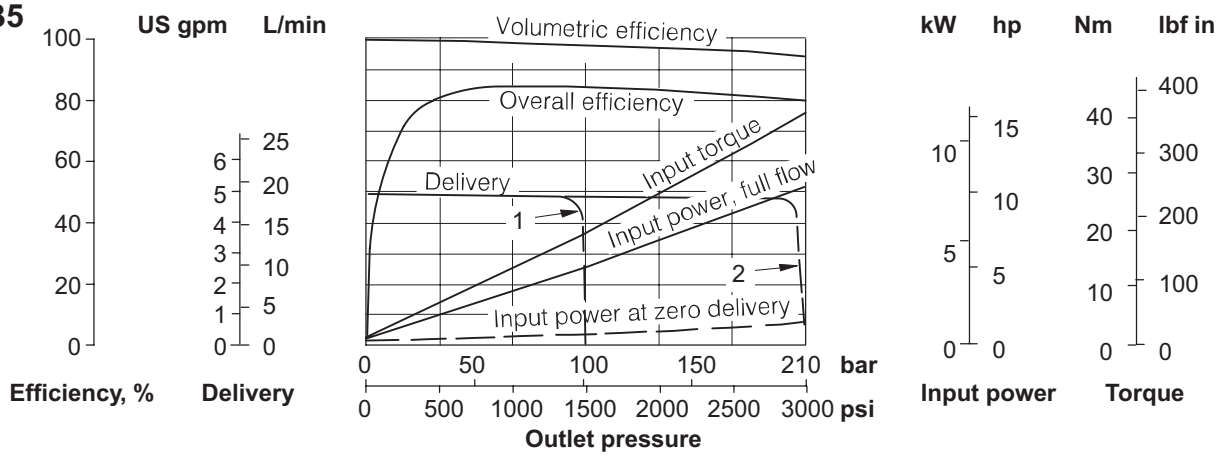

1 = Delivery with compensator setting of 100 bar (1500 psi)
2 = Delivery with compensator setting of 200 bar (3000 psi)

PVB6

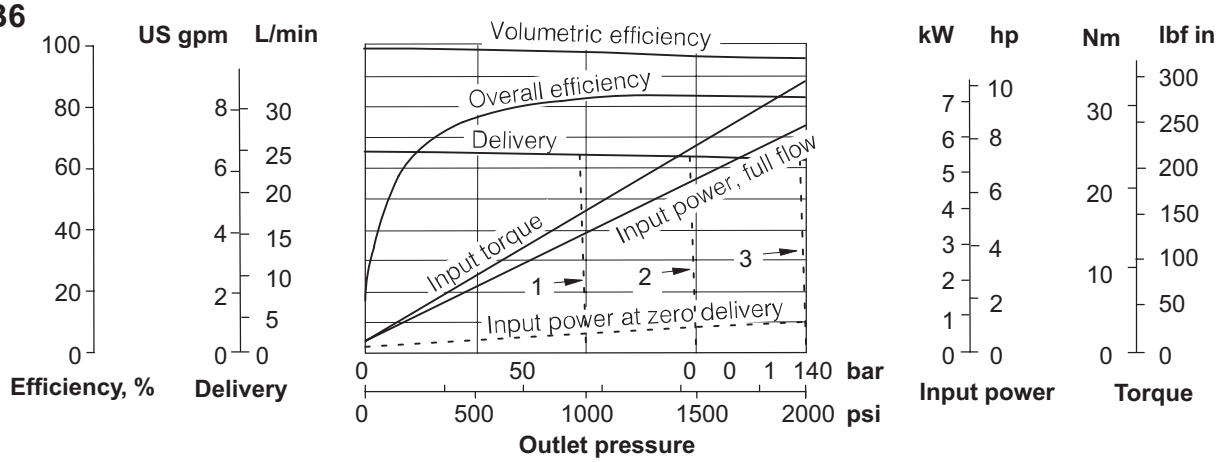

1 = Delivery with compensator setting of 70 bar (1000 psi)
2 = Delivery with compensator setting of 100 bar (1500 psi)
3 = Delivery with compensator setting of 140 bar (2000 psi)

PVB10

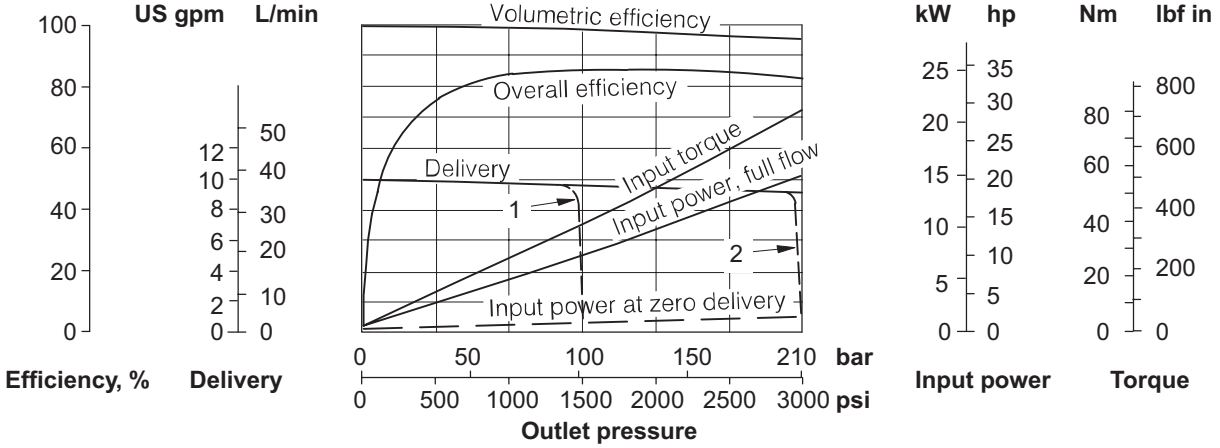

1 = Delivery with compensator setting of 100 bar (1500 psi)
2 = Delivery with compensator setting of 200 bar (3000 psi)

Performance Data at 1800 r/min Drive Speed (cont'd)

With oil at 21cSt (102 SUS) and at 49°C (120°F): Atmospheric inlet
For data at drive speed of 1500 r/min, see pages A.7 to A.10

PVB15

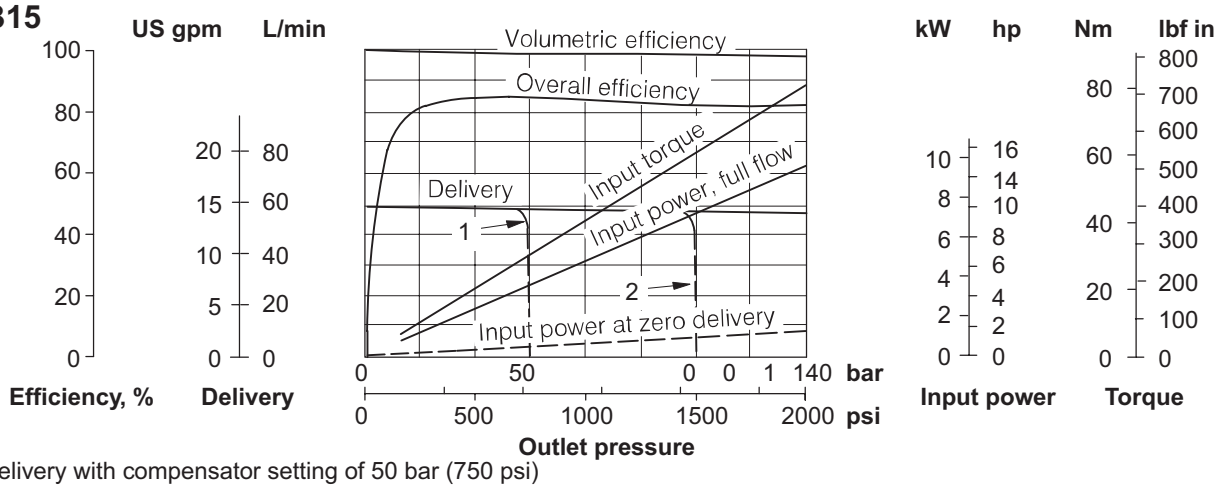

1 = Delivery with compensator setting of 50 bar (750 psi)
2 = Delivery with compensator setting of 100 bar (1500 psi)

PVB20

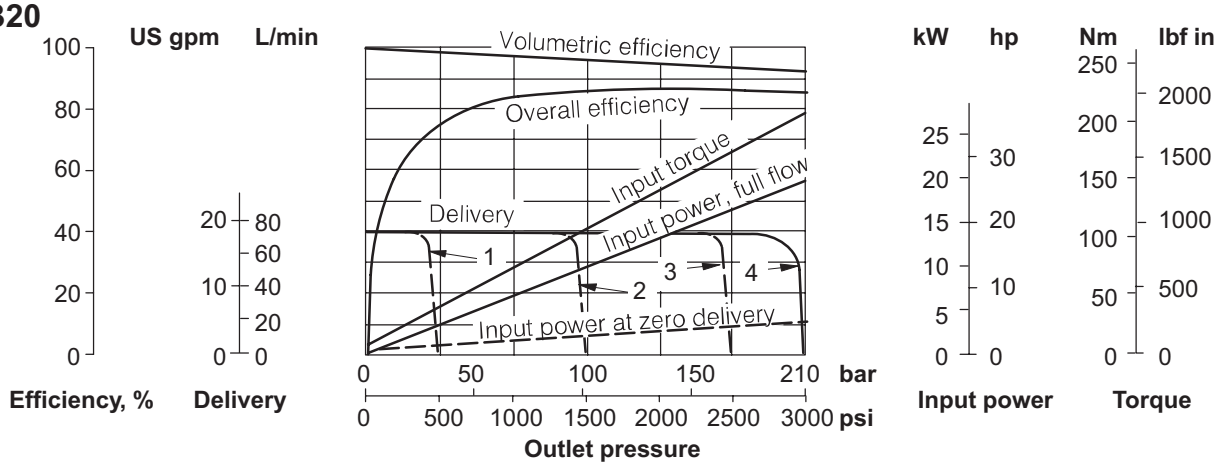

1 = Delivery with compensator setting of 35 bar (500 psi)
2 = Delivery with compensator setting of 100 bar (1500 psi)
3 = Delivery with compensator setting of 175 bar (2500 psi)
4 = Delivery with compensator setting of 200 bar (3000 psi)

PVB29

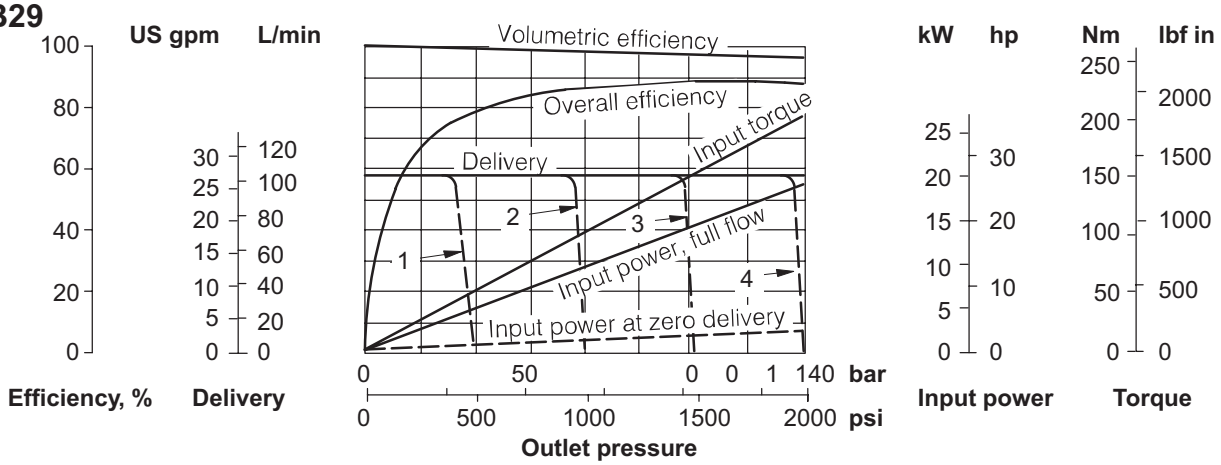

1 = Delivery with compensator setting of 35 bar (500 psi)
2 = Delivery with compensator setting of 100 bar (1500 psi)
3 = Delivery with compensator setting of 175 bar (2500 psi)
4 = Delivery with compensator setting of 200 bar (3000 psi)

Performance Data at 1800 r/min Drive Speed (cont'd)

With oil at 21cSt (102 SUS) and at 49°C (120°F): Atmospheric inlet

For data at drive speed of 1500 r/min, see pages A.7 to A.10

PVB45

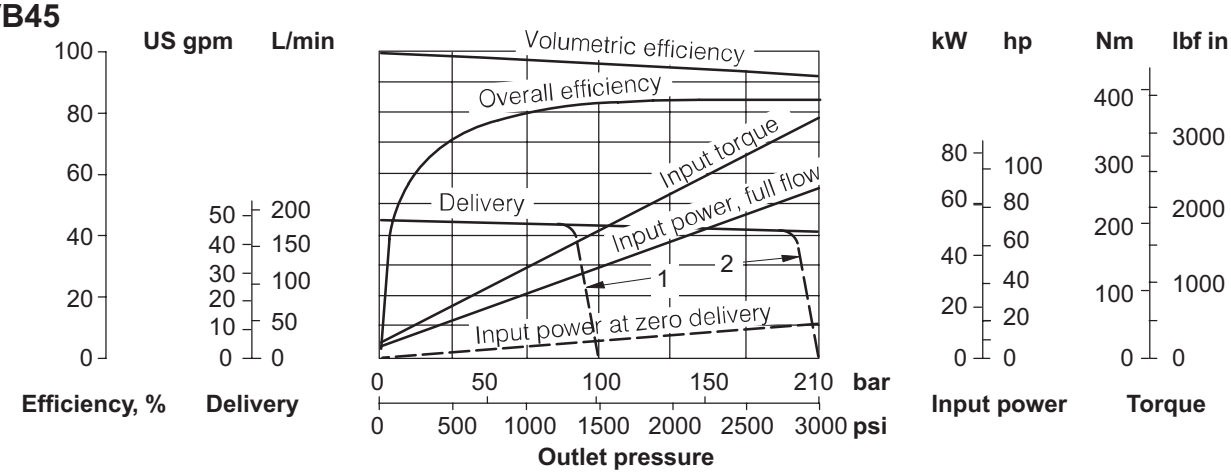

1 = Delivery with compensator setting of 100 bar (1500 psi)
2 = Delivery with compensator setting of 200 bar (3000 psi)

PVB90

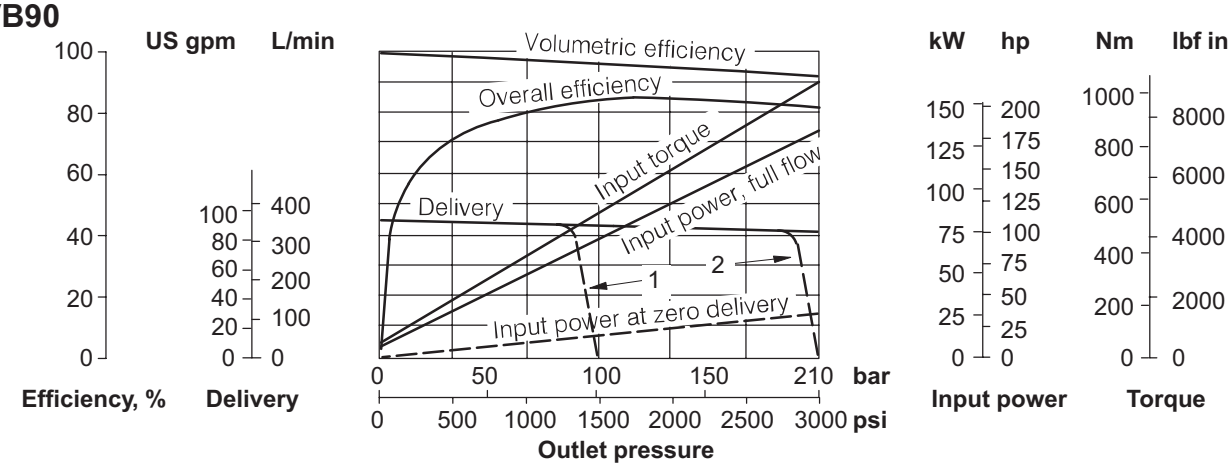

1 = Delivery with compensator setting of 100 bar (1500 psi)
2 = Delivery with compensator setting of 200 bar (3000 psi)

Control Data for PVB Pumps

Controls available as indicated in “Model Code” section.

“C” and “CM” Pressure Compensators
Automatically adjusts pump delivery at pre-adjusted pressure to match system demand. Delivery can decrease rapidly from maximum to zero through a pressure gradient typically 4 to 6 bar (60 to 90 psi) with normal circuit volumes.

For pressure adjustment ranges see “Model Code”.
Note:
1. When using PVB6, 15 or 29 pumps with “C” type compensators ther user must ensure that the maximum pressure setting never exceeds 140 or 100 bar (2000 or 1500 psi) dependent on the type of fluid being used.

   ***Caution**. It is possible to mechanically adjust the compensator up to 210 bar (3000 psi).*
2. It is recommended that, as for other types of positive pump, a relief valve should be fitted externally as protection against overloads. Where a relatively large amount of fluid is directly subject to compensator pressure, it may be possible to omit the relief valve.

“CC” and “CMC” Pressure Compensators with Adjustable Max. Displacement Stop
The pressure compensator section performs as described above. The adjustable stop allows the maximum pump delivery to be adjusted between 25 to 100%. To assist priming, adjust the stop setting to provide at least 40% of the maximum displacement.

“CG” Pressure Compensator, Remotely Controlled
Same as the “C” compensator, but arranged for remote pressure adjustment by suitable pilot controls. One or more pilot relief valves (e.g. C-175-*) and/or pilot directional valves, in series or in parallel, can provide many varied remote pilot systems.

“CV” Load Sensing Compensator, Remotely Controlled
Automatically matches pump delivery to system demand at a pressure approximately 17 bar (250 psi) above load pressure. This pressure difference can be created by:
– a variable flow restrictor (non-compensated flow control) or the spool opening of a directional control valve.

Both forms can be used with fixed and variable speed pump drives. In the latter case a fixed restrictor can provide pre-set, near-constant pump flow independent of drive speed, provided that the speed exceeds that which gives the required flow at full displacement. An external pressure limiter must be added to prevent overloading the pump; see “Functional Symbols” page A.3.

The matching of pump pressure and delivery to system demands provides power matching and conservation by minimizing system power wastage.

“H” Handwheel Control
Provides manual variation or selection of pump delivery. The control can be operated on both sides of center permitting bi-directional flow characteristics.
Approximate change of displacement per one turn of handwheel is:

PVB5	2,6 cm^3 (0.16 in^3)
PVB6	3,4 cm^3 (0.21 in^3)
PVB10	5,2 cm^3 (0.32 in^3)
PVB15	8,2 cm^3 (0.5 in^3)

“M” Lever Control
Provides mechanical or manual variation of pump delivery in approximate proportion to the angular movement from the center position. This control may be operated on both sides of center permitting bi-directional flow characteristics. The pintle-mounted lever control must be secured by suitable linkage to maintain desired settings; both extremes of pintle travel are limited by internal stops to approx. 17.5° from center.

Control torques (approx. at 1500 r/min).

PVB5	3,8 Nm @ 210 bar (33 lbf in at 3000 psi)
PVB6	2,7 Nm @ 138 bar (24 lbf in at 2000 psi)
PVB10, PVB15	7,5 Nm @ 70 bar (66 lbf in at 1000 psi)

***Note:** Torque varies with pressure and speed.*

“GE1” Minimum Displacement Control
Option for C(M)(C) and CG(C) compensators to limit the minimum displacement, in the fully compensated mode, to nominally 10% of full displacement.

Hydraulic Fluids
All pumps can be used with anti-wear hydraulic oils, water glycols and water-in-oil (invert) emulsions. It is possible to use these pumps with high water base fluids (e.g. 5%/95% oil-in-water emulsion) at pressures up to 70 bar (1000 psi).

The extreme operating viscosity range is from 220 to 13 cSt (1020 to70 SUS) for all pumps (except where 5%/95% emulsions are used). The recommended running range is 54 to 13 cSt. (245 to 70 SUS)

The viscosity of 5%/95% emulsions is near-constant at about 1 or 2 cSt (<35 SUS).

Temperature Limits
Minimum ambient . . . . . –20°C (–4°F)
Maximum ambient. . . +70°C (+158°F)

Fluid Temperatures

	Mineral oil	Water-containing
Mininmum	–20°C (–4°F)	+10°C (+50°F)
Maximum*	+80°C (+176°F)	+54°C (+129°F)

** To obtain maximum service life from both fluid and hydraulic system, 65° C (150° F) normally is the maximum temperature except for water-containing fluids. Whatever the actual temperature range, ensure that viscosities stay within the limits specified in "Hydraulic Fluids" section.*

Drive Requirements:
- Direction of Rotation
Clockwise or anti-clockwise (viewed at shaft end) to order; see also "Model Code", and "Installation Dimensions" sections.

- Drive Methods
Direct co-axial drive through a suitable flexible coupling is preferred. If an indirect drive is to be used.

Filtration Requirements
20/18/14 or ISO 18/14..

Noise Levels
* Typical values equivalent to NFPA

Speed r/min	Pressure bar (psi)	Stroke	Noise level – dB(A)*					
			PVB5	PVB6	PVB10	PVB15	PVB20	PVB29
1000	35 (500)	Full flow	51	52	54	58	–	–
		Cutoff	51	51	44	47	–	–
	70 (1000)	Full flow	54	55	56	60	–	–
		Cutoff	52	54	49	54	–	–
	140 (2000)	Full flow	56	57	60	62	–	–
		Cutoff	58	56	55	59	–	–
	210 (3000)	Full flow	60	–	61	–	–	–
		Cutoff	59	–	59	–	–	–
1200	35 (500)	Full flow	50	51	55	60	–	–
		Cutoff	52	51	48	51	–	–
	70 (1000)	Full flow	54	55	57	61	74	70
		Cutoff	56	57	51	54	–	–
	140 (2000)	Full flow	59	59	60	63	74	73
		Cutoff	59	60	54	58	69	76
	210 (3000)	Full flow	60	–	62	–	78	–
		Cutoff	61	–	56	–	–	–
1500	35 (500)	Full flow	54	54	58	63	–	–
		Cutoff	52	52	51	52	–	–
	70 (1000)	Full flow	58	58	60	64	–	–
		Cutoff	57	57	55	55	–	–
	140 (2000)	Full flow	61	62	62	66	–	–
		Cutoff	62	59	62	59	–	–
	210 (3000)	Full flow	64	–	65	—	–	–
		Cutoff	62	–	63	—	–	–
1800	35 (500)	Full flow	57	58	61	64	–	–
		Cutoff	55	57	55	56	–	–
	70 (1000)	Full flow	60	61	63	67	76	77
		Cutoff	59	58	59	60	–	–
	140 (2000)	Full flow	63	66	65	69	81	81
		Cutoff	62	63	62	64	75	81
	210 (3000)	Full flow	64	–	67	–	81	–
		Cutoff	64	–	65	–	–	–

Itahydraulic
Power Tecnology

PFB5 SAE Flange Mounting

3rd angle projection

Installation Dimensions in mm (inches)

Optional foot bracket, shown in dashed outline; kit FB-A-10 comprises foot bracket and two pump fixing bolts. Order separately, if required.

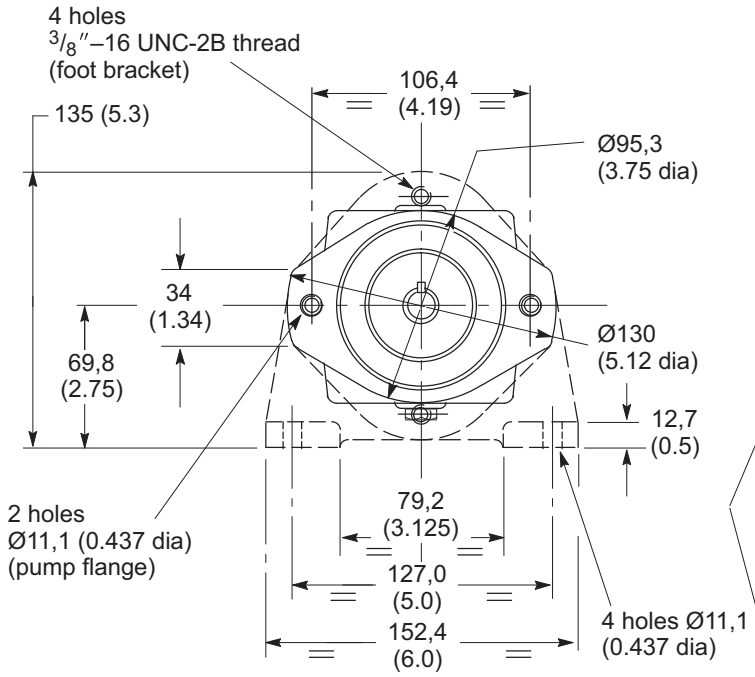

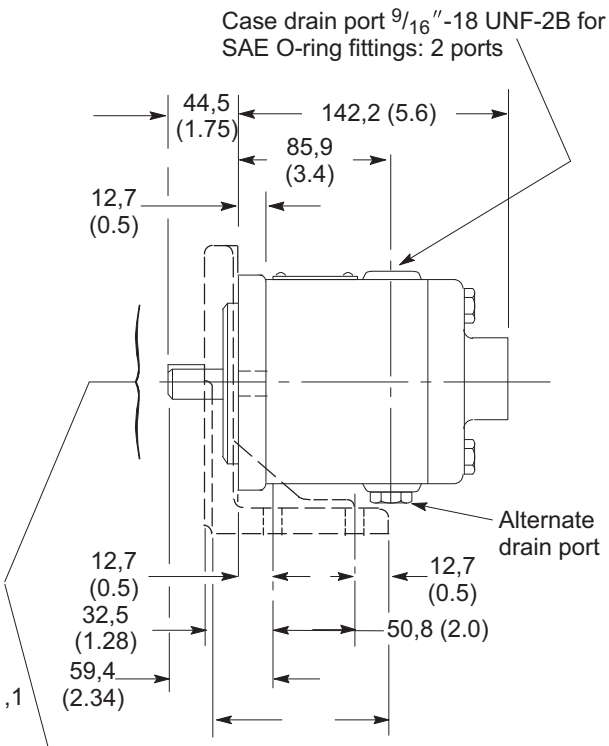

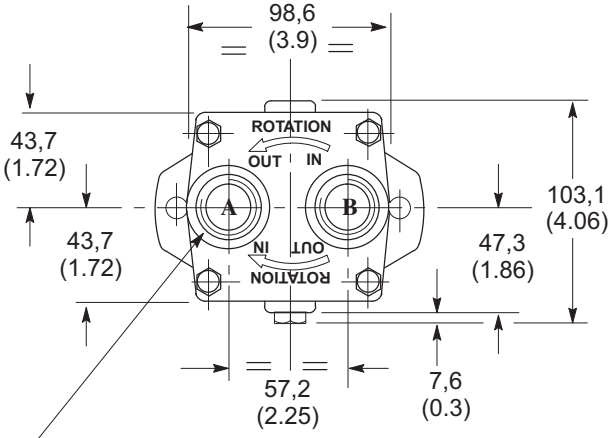

Inlet/outlet ports:
1 1/16″-12 UNF-2B thread for SAE O-ring fittings.

View on rear end of pump

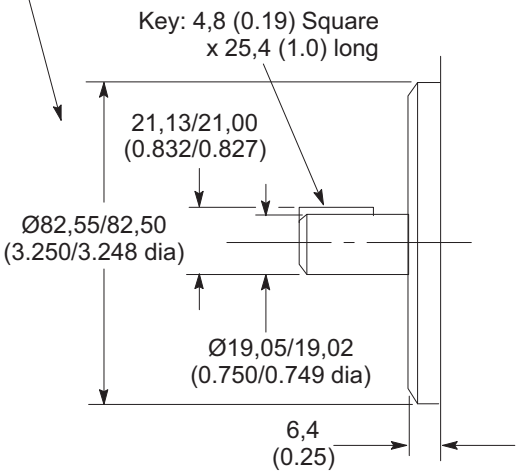

Detail of shaft, key and locating diameter

Itahydraulic
Power Tecnology

PFB10 SAE Flange Mounting

Installation Dimensions in mm (inches)

Optional foot bracket, shown in dashed outline; kit FB-B-10 comprises foot bracket and two pump fixing bolts. Order separately, if required.

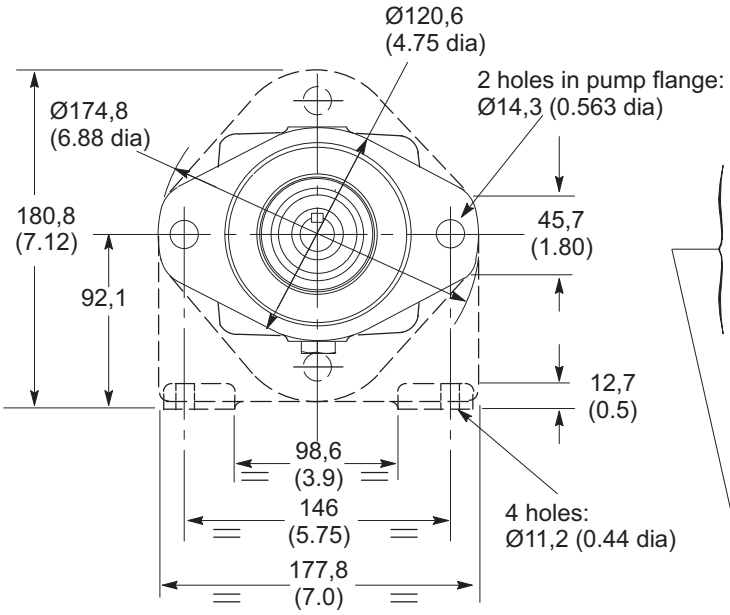

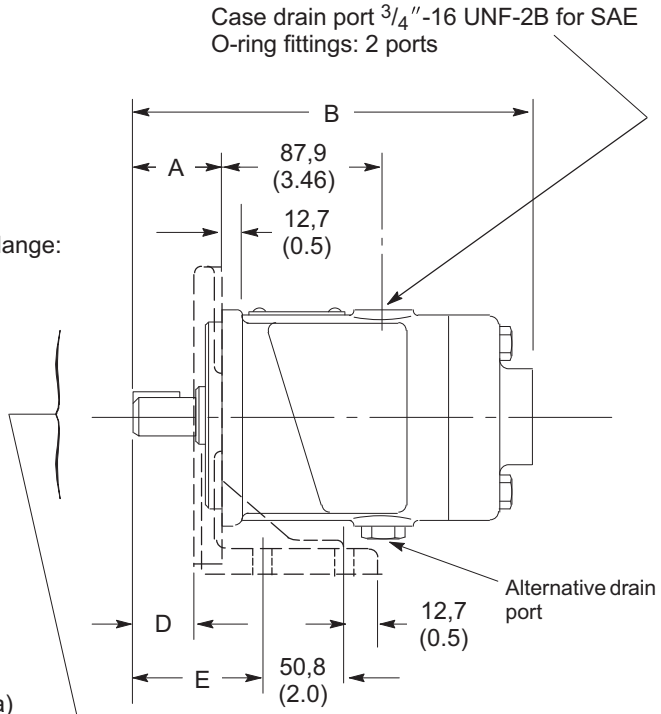

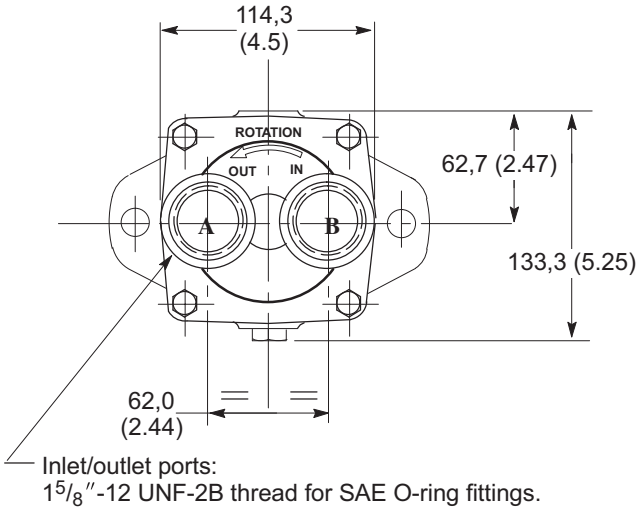

View on rear end of pump

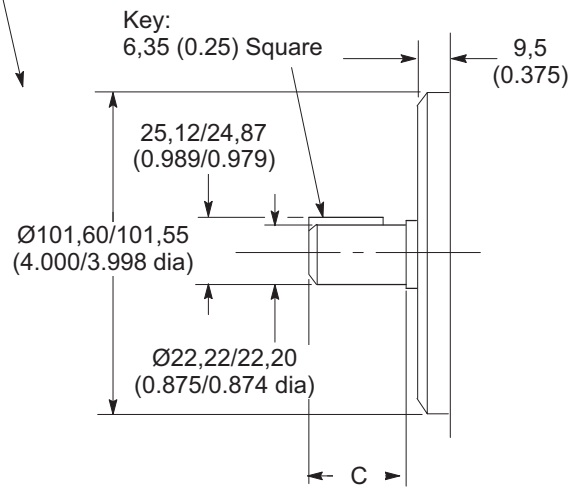

Detail of shaft, key and locating diameter

Pump type	A	B	C	D*	E*
PFB-*-30	44,4 (1.75)	213,9 (8.42)	33,3 (1.31)	26,9 (1.06)	59,4 (2.34)
PFB10-*Y-30	58,7 (2.31)	228,1 (8.98)	47,6 (1.87)	41,1 (1.62)	73,7 (2.9)

*Omit for foot bracket models)

Itahydraulic
Power Tecnology

PFB20 SAE Flange Mounting

Installation Dimensions in mm (inches)

Optional foot bracket, shown in dashed outline; kit FB-B-10 comprises foot bracket and two pump fixing bolts. Order separately, if required.

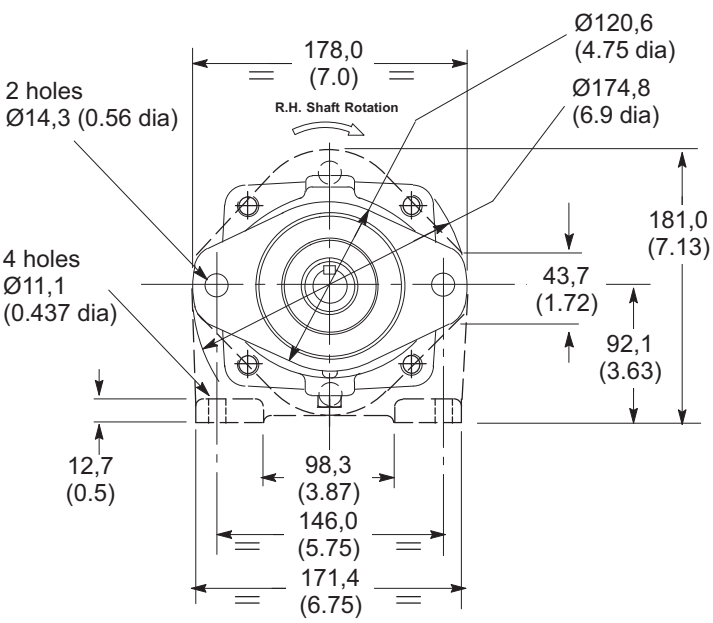

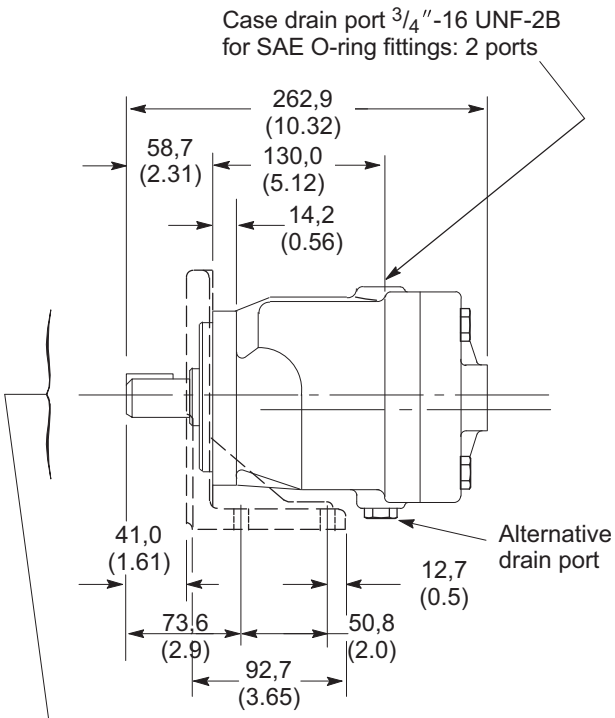

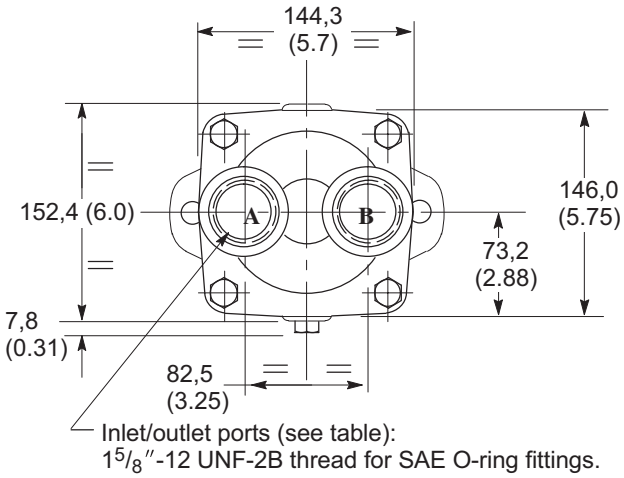

View on rear end of pump

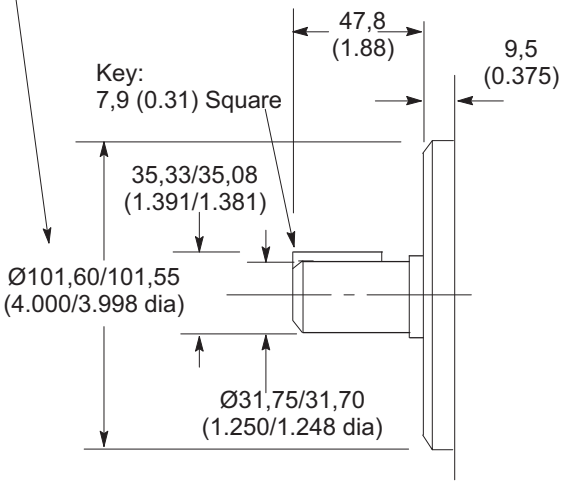

Detail of shaft, key and locating diameter

Shaft rotation	Inlet port	Outlet port
RH	B	A
LH	A	B

Itahydraulic
Power Tecnology

PVB5/6 SAE Flange Mounting: Pressure Compensator Control - “C” and “CM”

Installation Dimensions in mm (inches)

See also “Control Data” section, page A.15.

Optional foot bracket, shown in dashed outline; kit FB-A-10 comprises foot bracket and two pump fixing bolts. Order separately, if required.

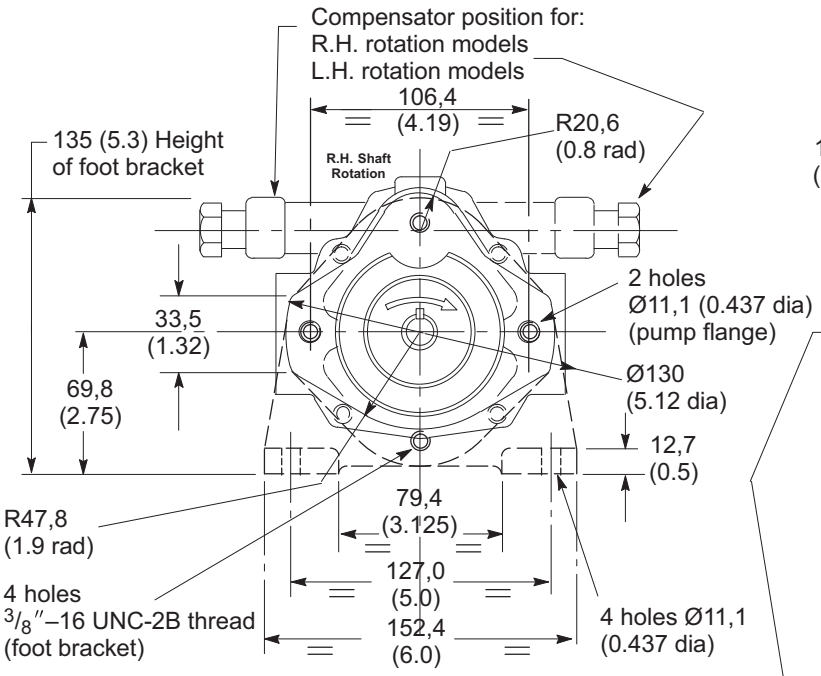

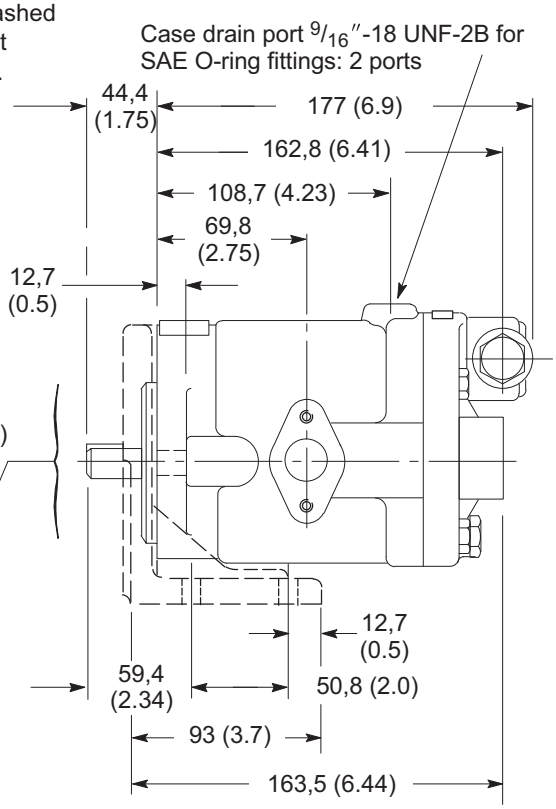

Caution: While pump is operating do not back compensator adjustment screw out beyond dimension shown.

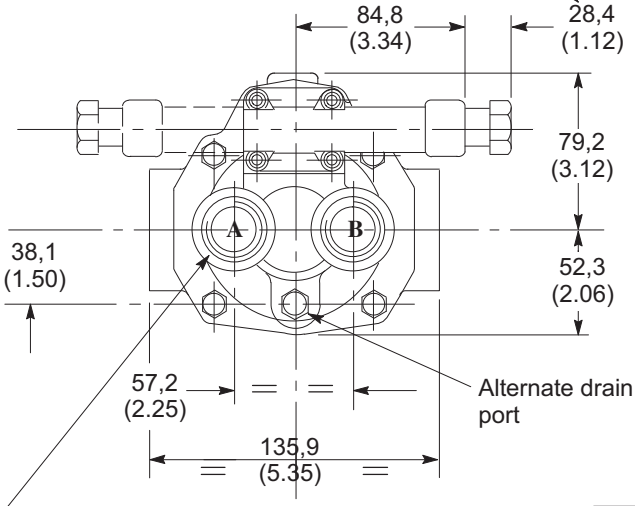

Inlet/outlet ports (see table):
$1^{1}/_{16}$″-12 UNF-2B thread for SAE O-ring fittings.

View on rear end of pump

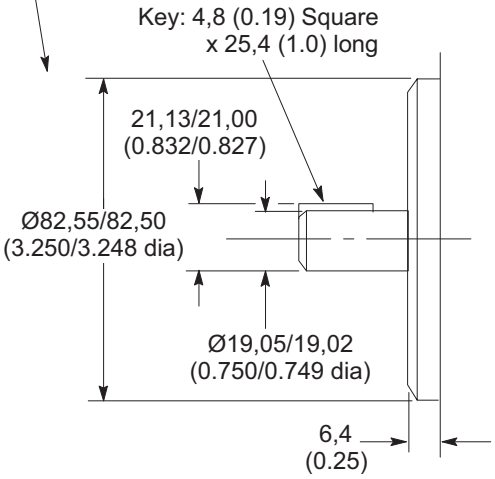

Detail of shaft, key and locating diameter

Shaft rotation	Inlet port	Outlet port
RH	A	B
LH	B	A

PVB5/6 Thru-Shaft Models (with Side Ports)

Installation Dimensions in mm (inches)

Maximum output torque is 40 Nm (354 lbf in), less unput torque at system pressure, see performance curves:
At 1500 r/min drive speed, page A.8.
At 1800 r/min drive speed, page A.12.

For other dimensions and installation data see page A.20.

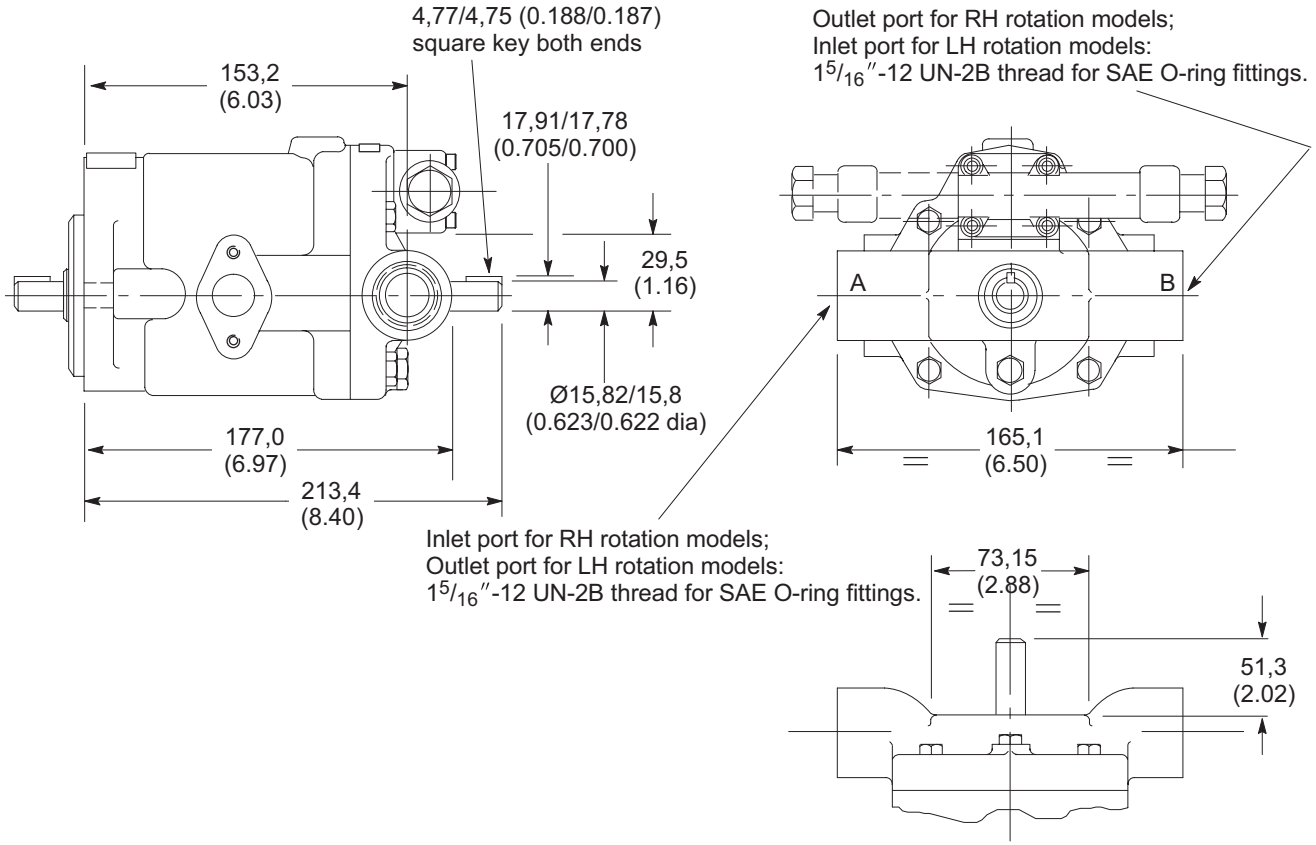

PVB5/6 (with Side Ports only)

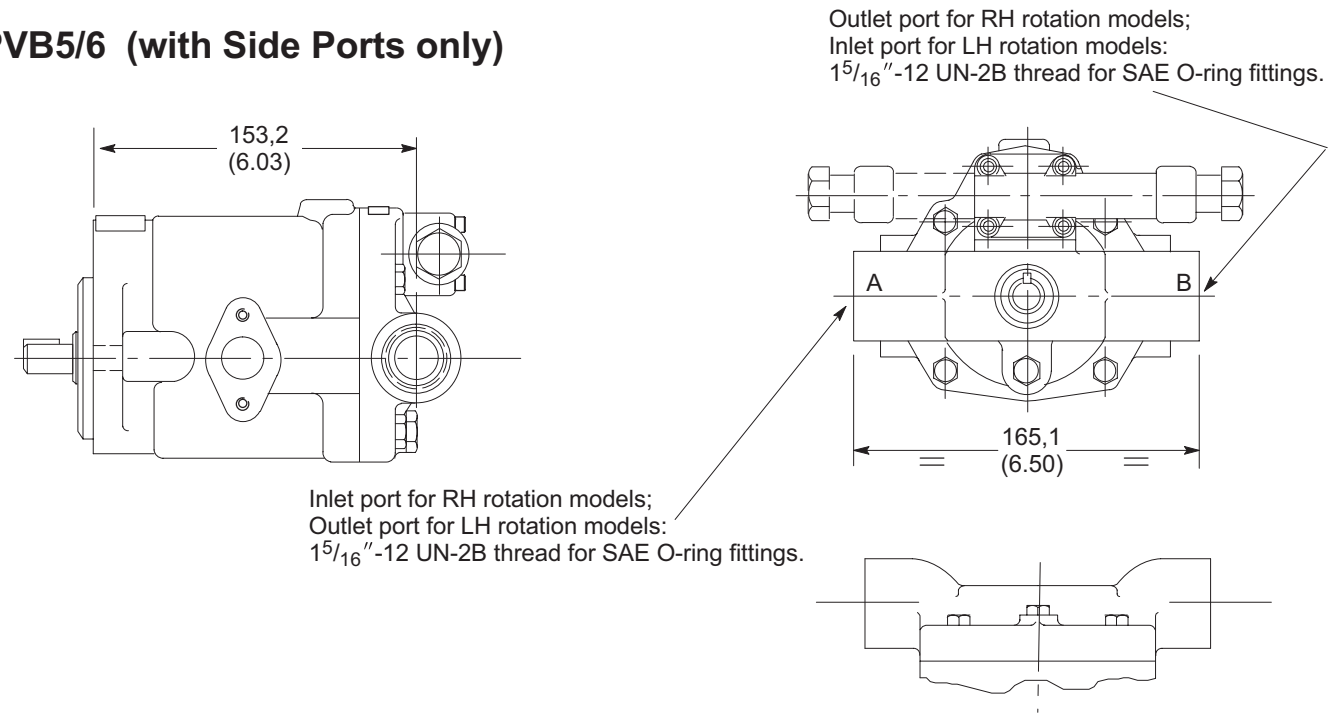

Itahydraulic
Power Tecnology

PVB10/15 SAE Flange Mounting
Pressure Compensator Control - “C” and “CM”

Installation Dimensions in mm (inches)

See also “Control Data” section, page A.15.

Optional foot bracket, shown in dashed outline; kit FB-B-10 comprises foot bracket and two pump fixing bolts. Order separately, if required.

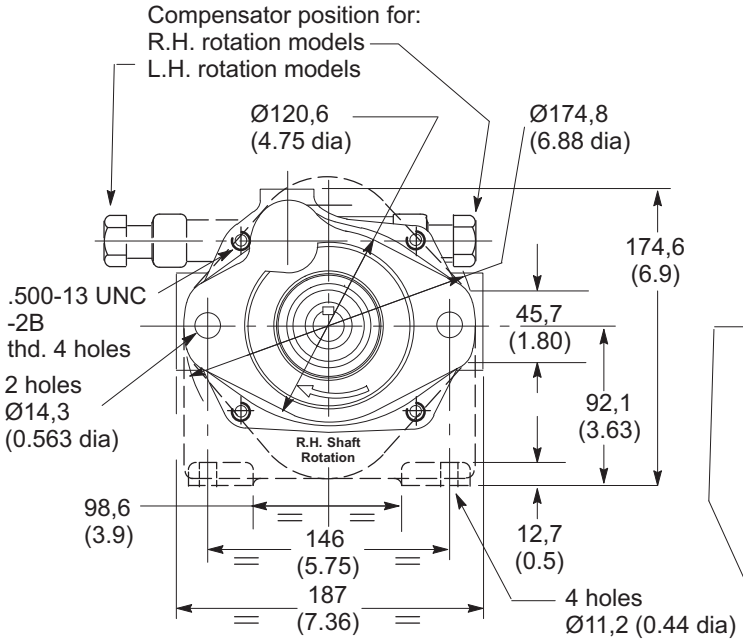

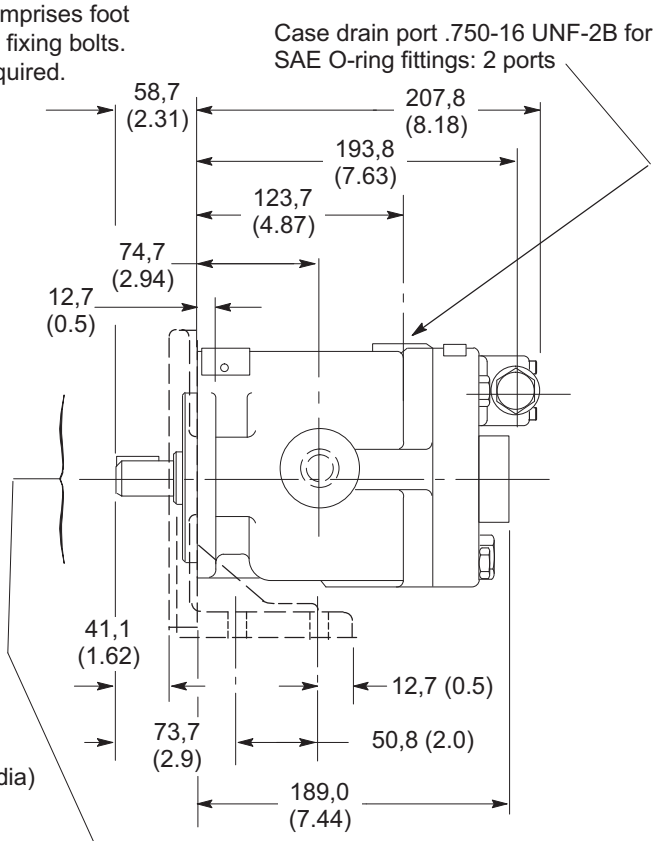

Caution: While pump is operating do not back compensator adjustment screw out beyond dimension shown.

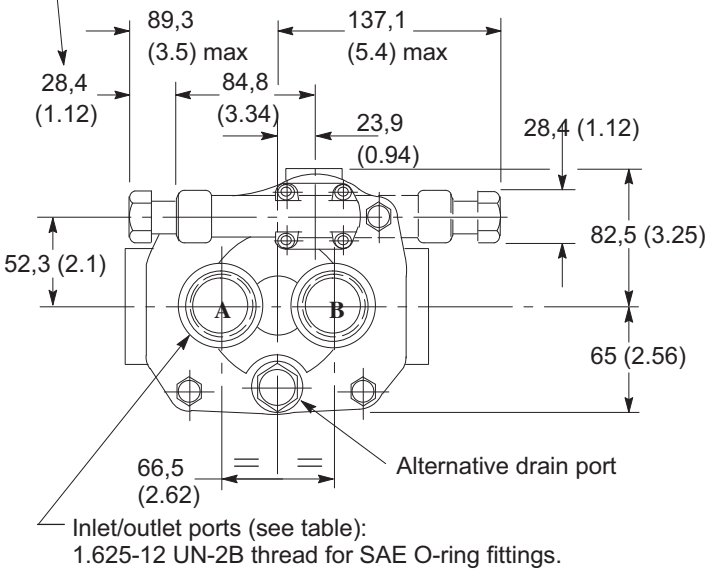

View on rear end of pump

Shaft rotation	Inlet port	Outlet port
RH	A	B
LH	B	A

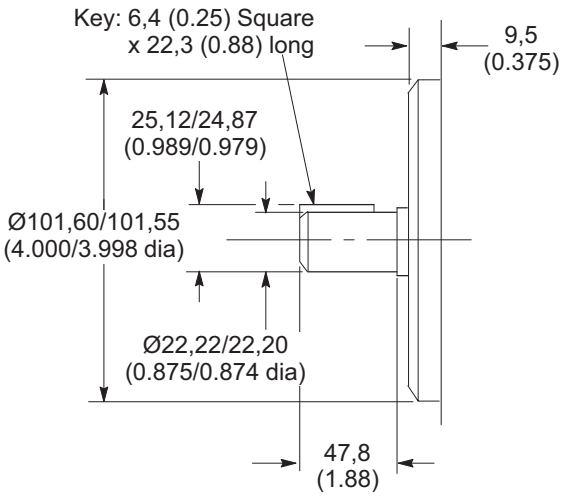

Detail of shaft, key and locating diameter

Itahydraulic
Power Tecnology

PVB10/15 Thru-Shaft Models (with Side Ports)

Maximum output torque is 83 Nm (735 lbf in), less unput torque at system pressure, see performance curves:
At 1500 r/min drive speed, pages A.8 & A.9.
At 1800 r/min drive speed, page A.12 & A.13.

For other dimensions and installation data see page A.22.

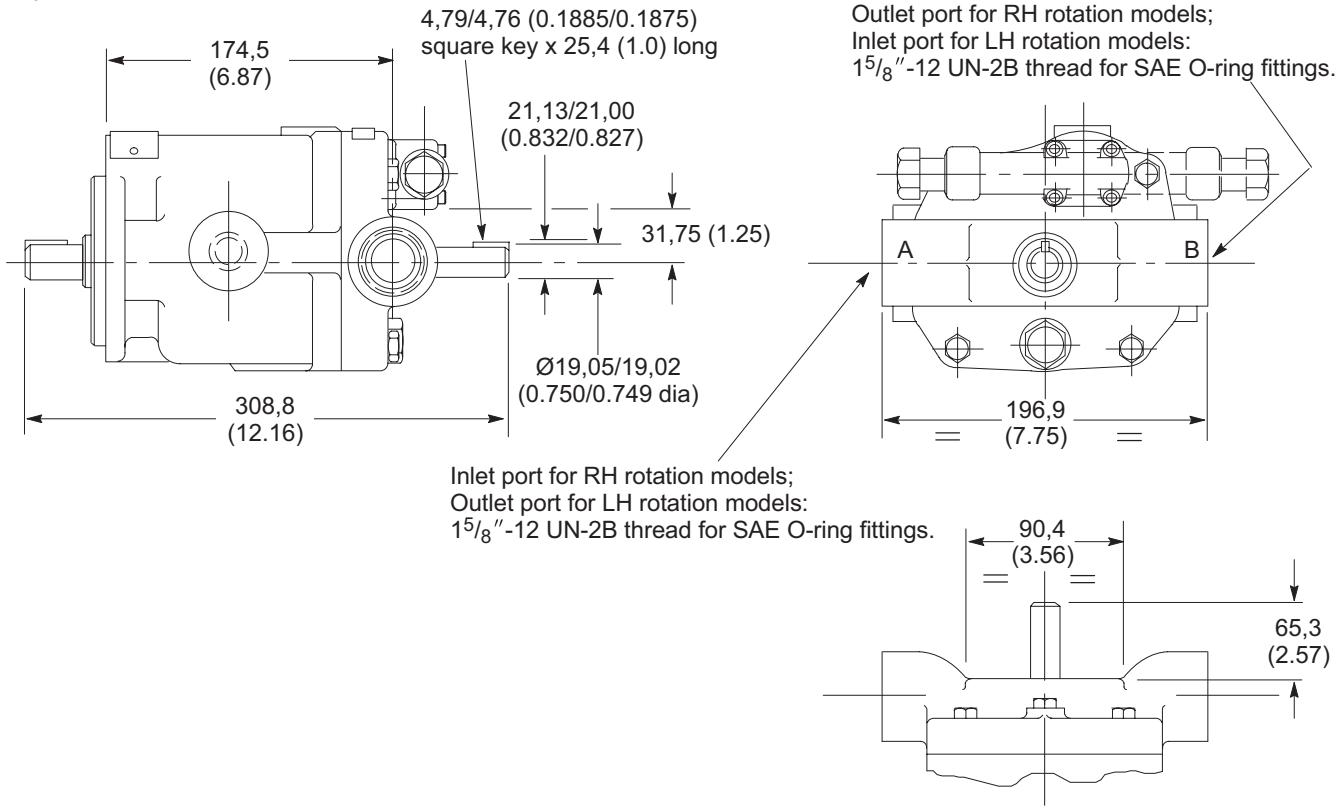

PVB10/15 (with Side Ports only)

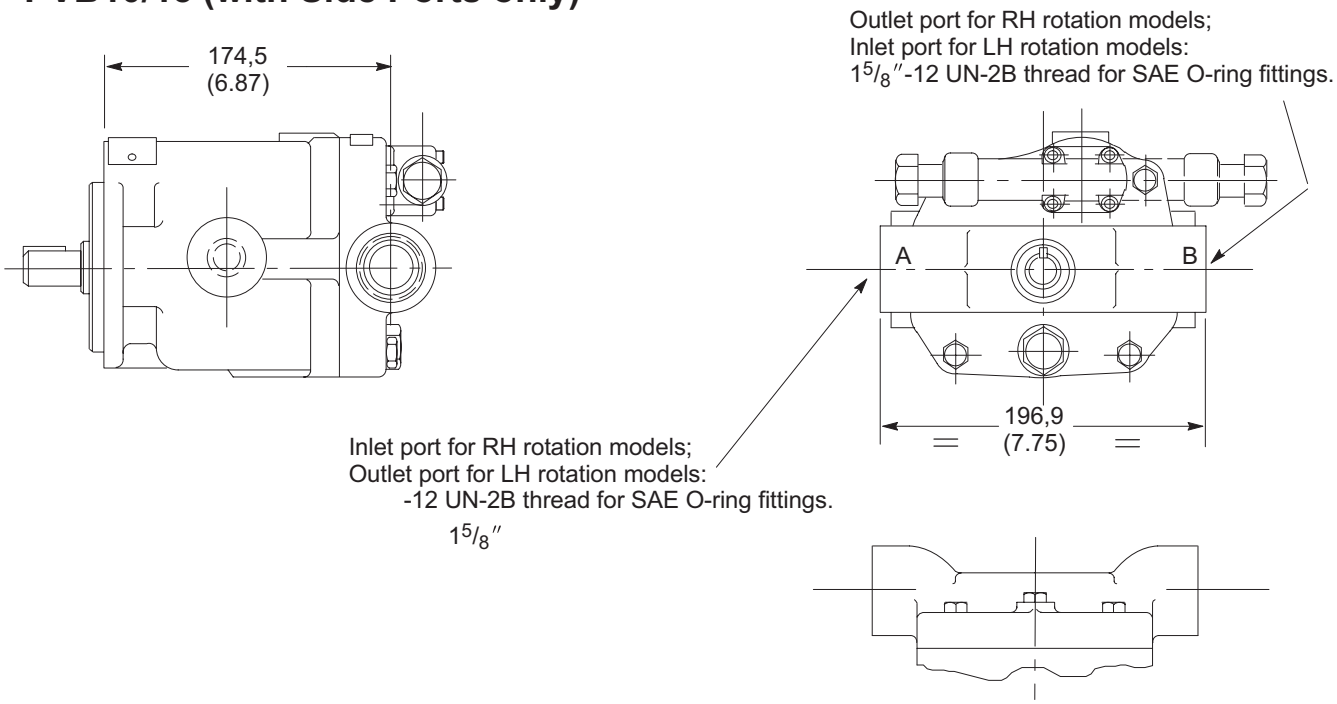

Itahydraulic
Power Tecnology

PVB5/6 and PVB10/15 Manual/Mechanical Controls

Lever Control - “M” and No Control - “V”

Units with this control may be operated on both sides of center permitting bi-directional fluid flow characteristics.

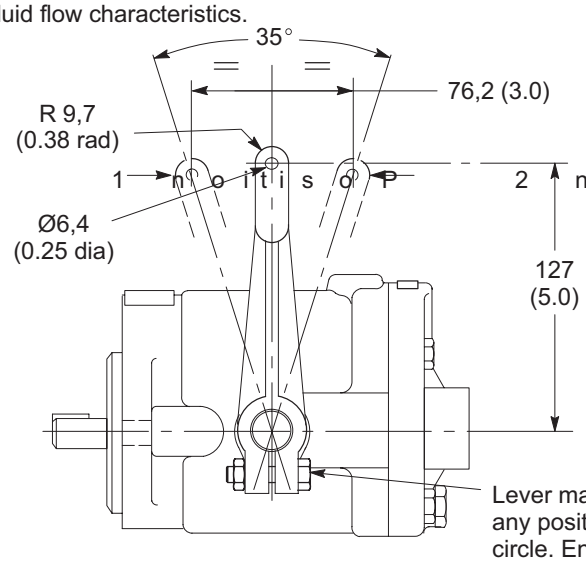

Lever may be set at any position in 360° circle. Ensure clamp bolt is fully tightened.

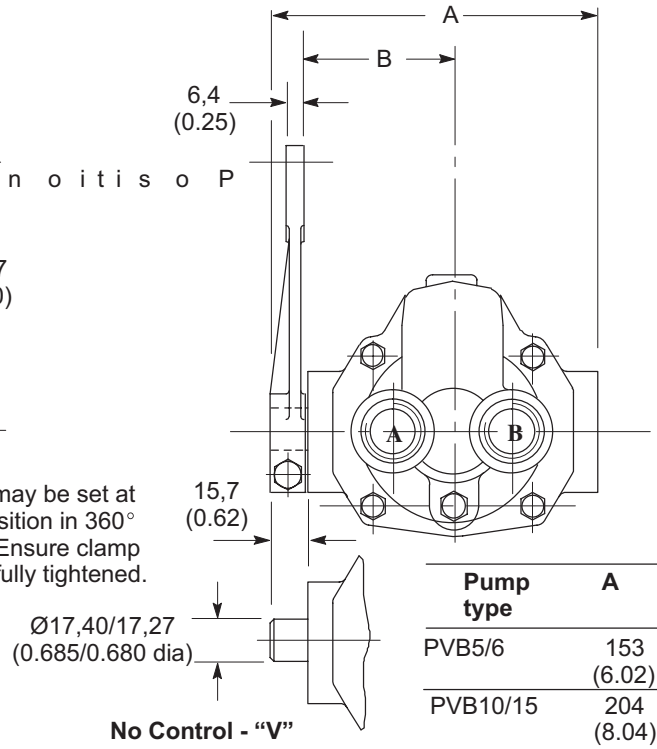

No Control - “V”

Shaft rotation	Lever position	Outlet port
RH	1	A
	2	B
LH	1	B
	2	A

Pump type	A	B
PVB5/6	153 (6.02)	68,9 (2.7)
PVB10/15	204 (8.04)	99,9 (3.93)

Handwheel Control - “H”

Units with this control may be operated on both sides of center permitting bi-directional fluid flow characteristics.

Max. flow adjustment. Adjust and lock to limit max. flow.

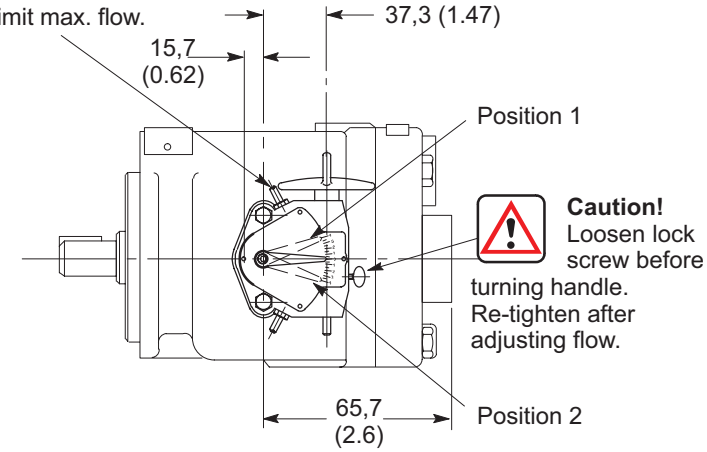

Caution! Loosen lock screw before turning handle. Re-tighten after adjusting flow.

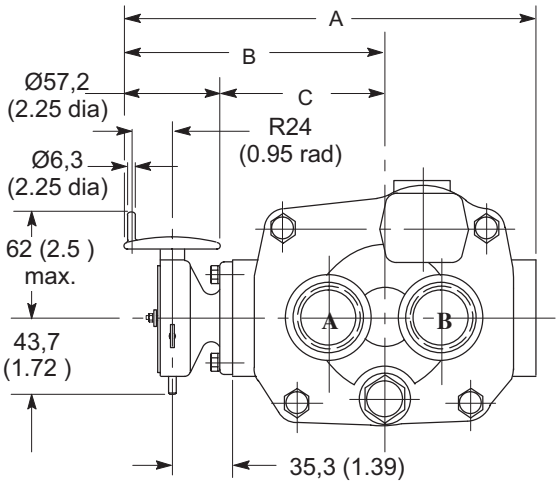

Shaft rotation	Pointer position	Handwheel rotation from zero	Outlet port
RH	1	Clockwise	A
	2	Counter-clockwise	B
LH	1	Clockwise	B
	2	Counter-clockwise	A

Pump type	A	B	C
PVB5/6	200 (7.87)	129 (5.08)	70,6 (2.78)
PVB10/15	250 (9.84)	140 (5.51)	93,5 (3.68)

Itahydraulic
Power Tecnology

PVB20/29 SAE Flange Mounting
Pressure Compensator Control - “C” and “CM”

Installation Dimensions in mm (inches)

See also “Control Data” section, page A.15.

Optional foot bracket, shown in dashed outline; kit FB-C-10 comprises foot bracket and two pump fixing bolts. Order separately, if required.

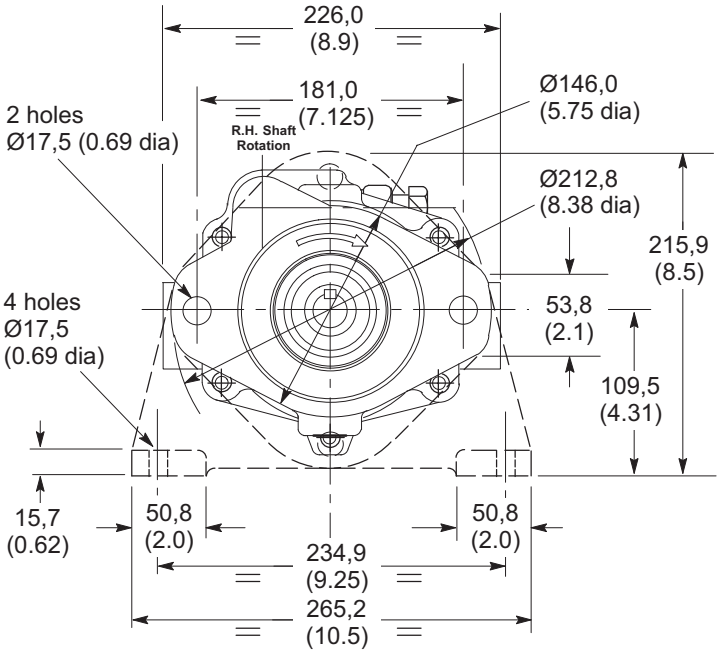

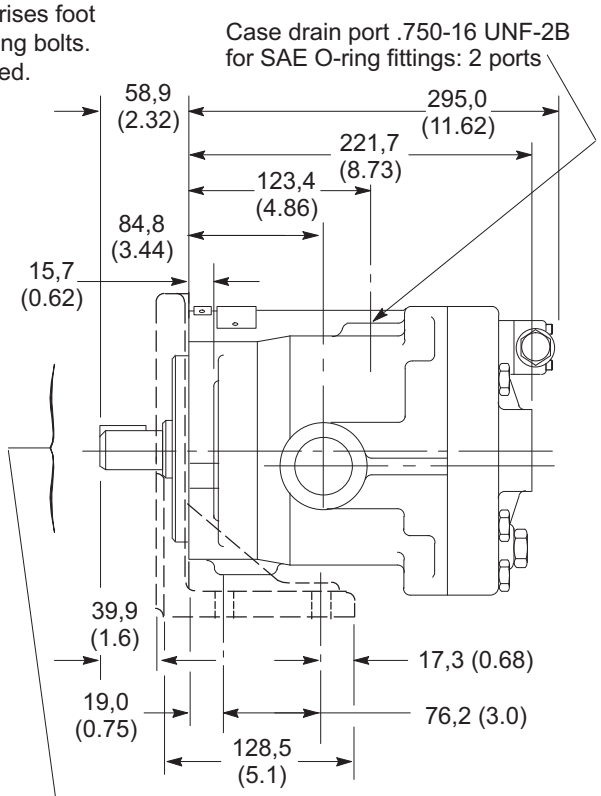

Caution: While pump is operating do not back compensator adjustment screw out beyond dimension shown.

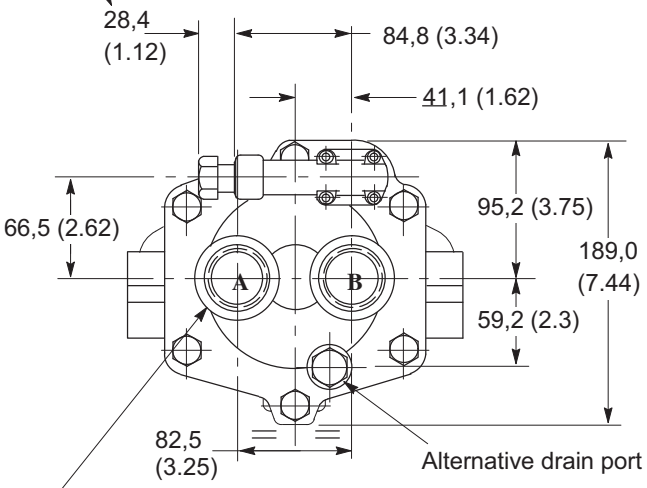

Inlet/outlet ports (see table):
1.625-12 UNF-2B thread for SAE O-ring fittings.

View on rear end of pump

Shaft rotation	Inlet port	Outlet port
RH	A	B
LH	B	A

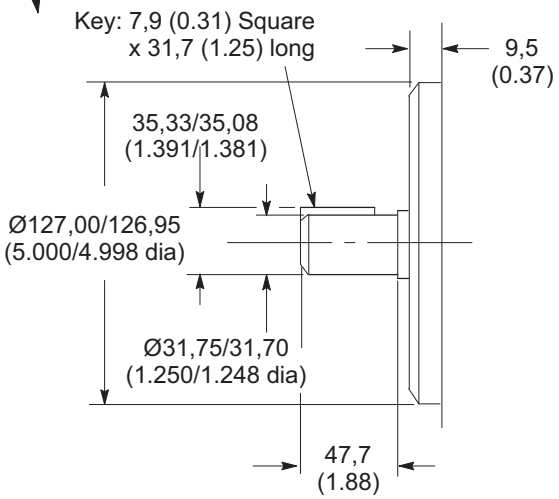

Detail of shaft, key and locating diameter

PVB20/29 Thru-Shaft Models (with Side Ports)

Maximum output torque is 159 Nm (1408 lbf in), less unput torque at system pressure, see performance curves:

At 1500 r/min drive speed, page A.9
At 1800 r/min drive speed, page A.13

For other dimensions and installation data see page A.25.

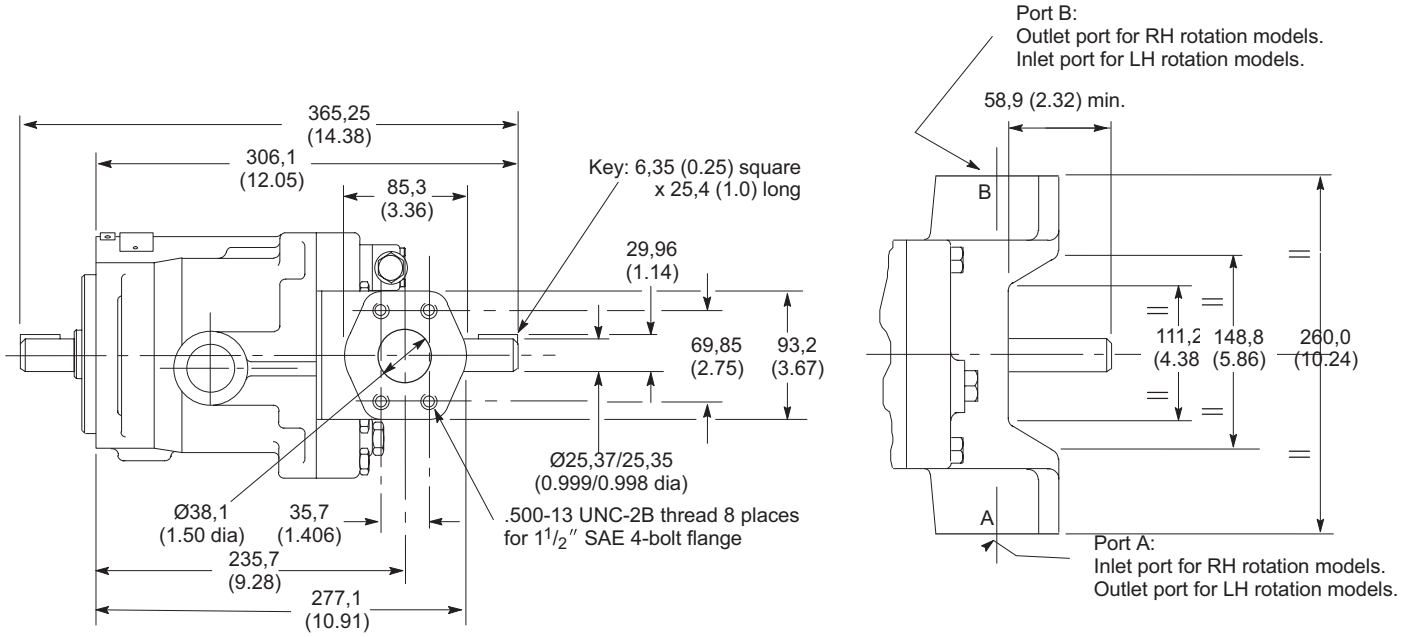

PVB20/29 (with Side Ports only)

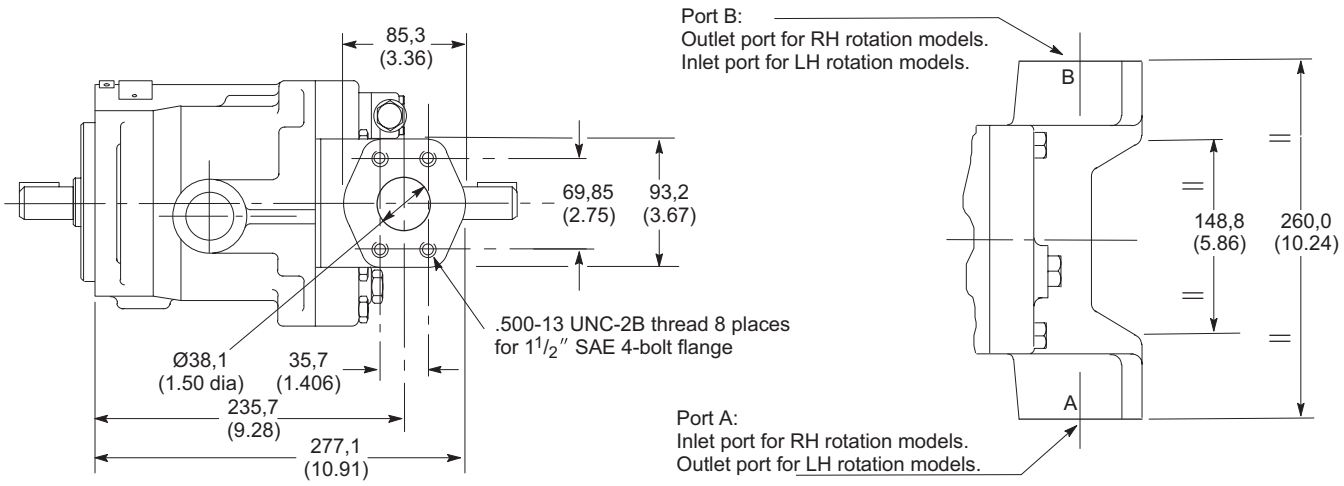

Itahydraulic
Power Tecnology

PVB45 Flange-Mounted Model

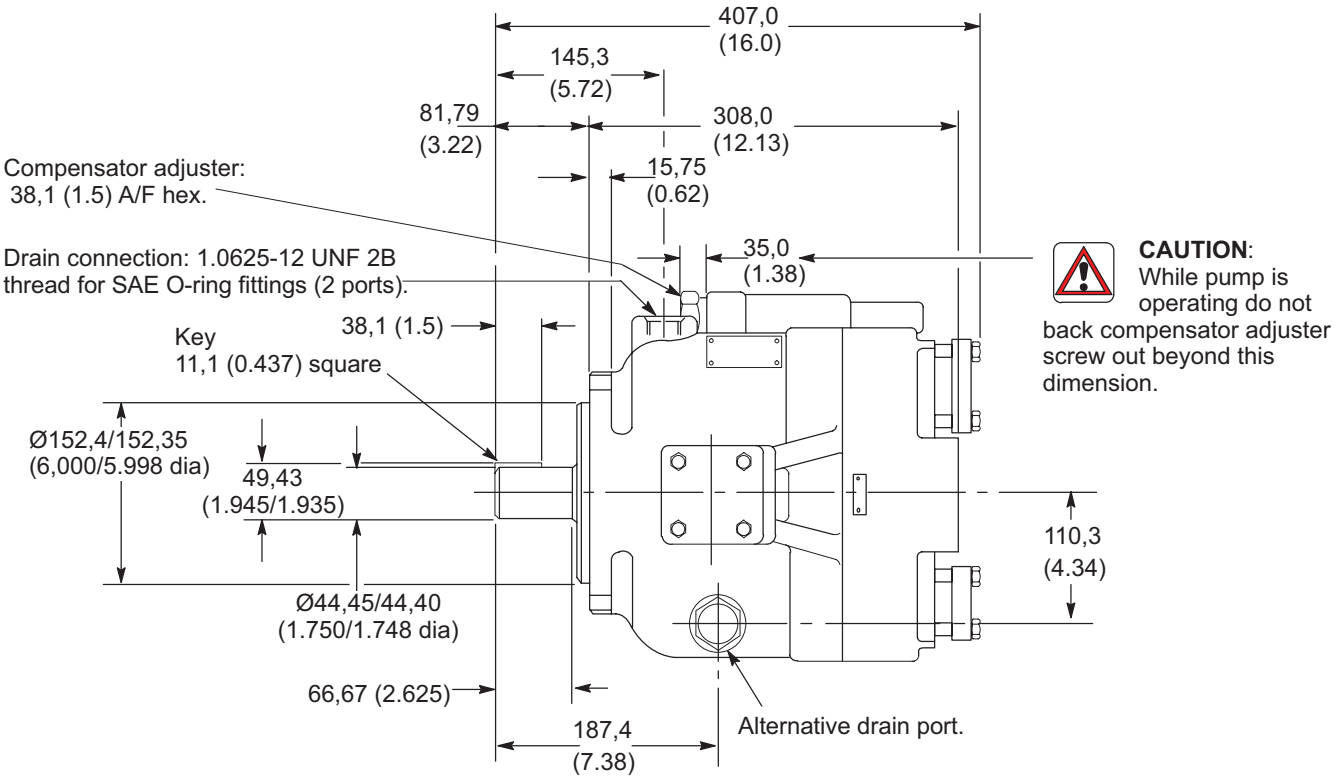

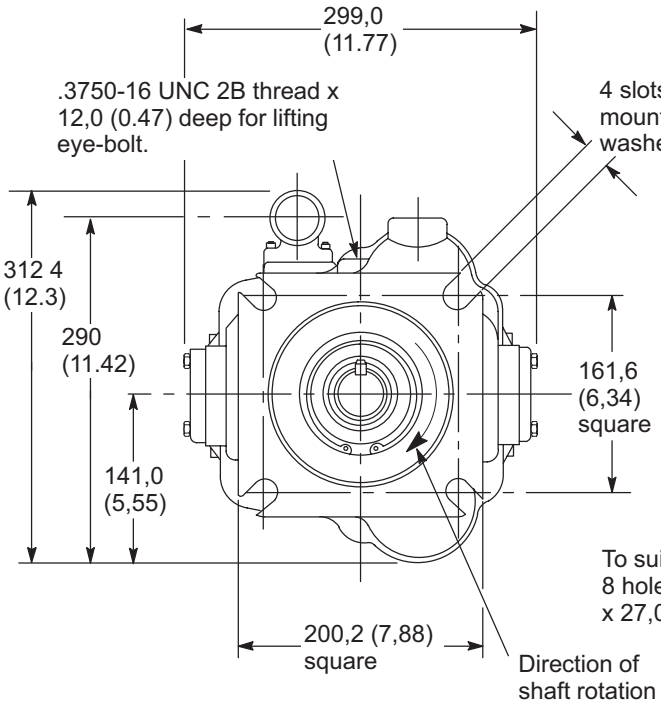

View on shaft end of pump

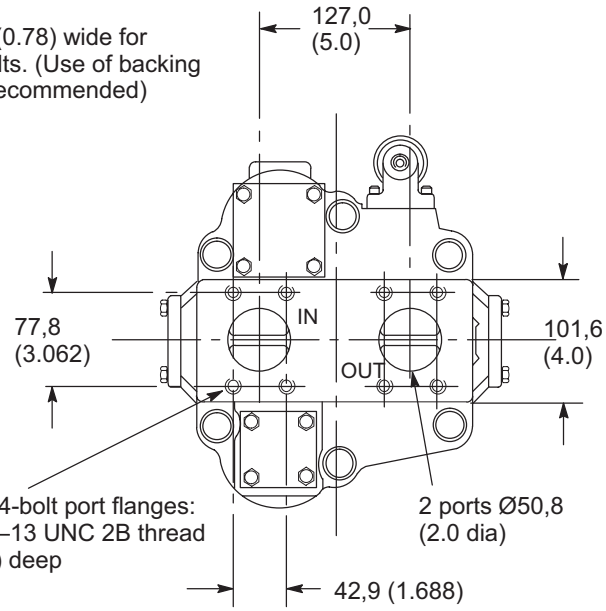

View on rear end of pump

Itahydraulic
Power Tecnology

PVB45 Foot-Mounted Model

For other dimensions and installation data see page 27.

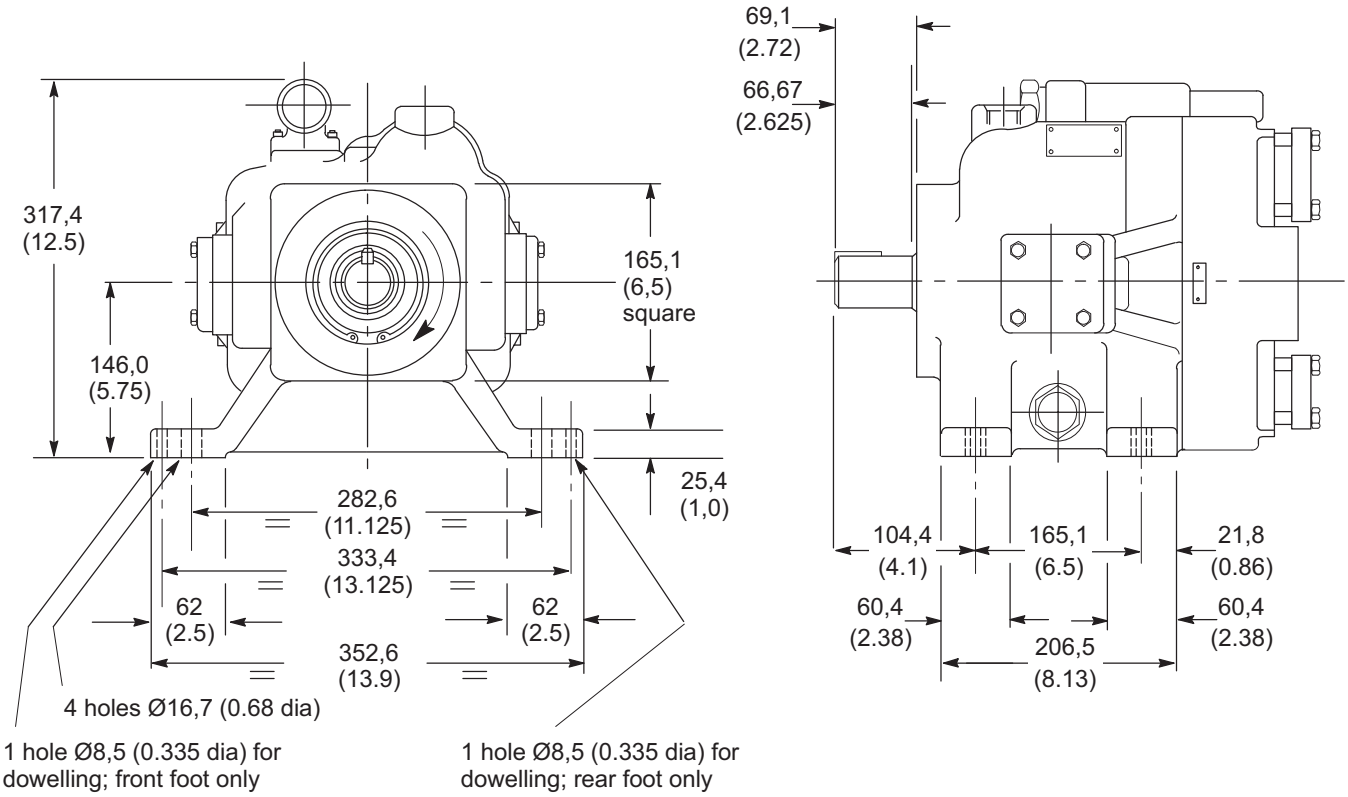

PVB90

Foot mounting option (designated by Model Code 3 = "F") is shown in dotted outline. An alternative base mounting facility is provided by four tapped holes in the bottom face of the pump - see page A.30.

Compensator adjuster: 38,1 (1.5) A/F hex.

Drain connection: 1.3125-12 UN 2B thread for SAE O-ring fittings (2 ports).

Key 11,1 (0.437) square x 44,5 (1.75) long

68,25 (2.69)
396,7 (15.62)
365 (14.4)
351,5 (13.84)
156,5 (6.16)
35,0 (1.38)
38,1 (1.5)
127,0 (5.0)
49,40/49,15 (1.945/1.935)
111,2 (4.38)
Ø152,4/152,35 (6,000/5.998 dia)
Ø44,45/44,40 (1.750/1.748 dia)
12,7 (0.5)
79,2 (3.12)
215,9 (8.5)
130,0 (5.12)
260,3 (10.25)
187,5 (7.38)

CAUTION: While pump is operating do not back compensator adjuster screw out beyond this dimension.

Drain connection: 1.3125-12 UN 2B thread

4 holes Ø16,7 (0.66 dia)

▼ *Location of tappings for lifting eye-bolts,: 2 at shaft end; 1 at rear: .3750-16 UNC 2B thread x 12,0 (0.47) deep.*

329 (12.95)
Ø228,6 (9.0 dia)
4 holes Ø20,6 (0.81 dia) at 45° from vertical/ horizontal center lines.
63,5 (2.5)
center line to drain port
163,8 (10.24)
167,6 (10.48)
200 (7,9) square
190,5 (7.5)
139,7 (5,5)
393,7 (15.5)
438,1 (17.25)

View on shaft end of pump

139,7 (5.5)
88,9 (5.5)
2 ports Ø60,4 (2.4 dia)
50,8 (2.0)
A
B
To suit SAE 4-bolt port flanges: 8 holes .500-13 UNC 2B thread x 27,0 (1.06) deep

View on rear end of pump

Shaft rotation	Inlet port	Outlet port
RH	A	B
LH	B	A

Detail of tappings in base of pump.

Shaft end of pump

212,7 (8.375)

4 holes tapped .6250-12 UNC-2B x 28 (1.1) deep

130,2 (5.125)

PVB5/6, PVB 10/15 and PVB20/29 with Pressure Compensator and Adjustable Maximum Displacement Stop: Control Types “CC” and “CMC”

For general dimensions and installation data of these pumps, see pages A.20, A.22 and A.25

Caution: While pump is operating do not back compensator adjustment screw out beyond dimension ● shown.

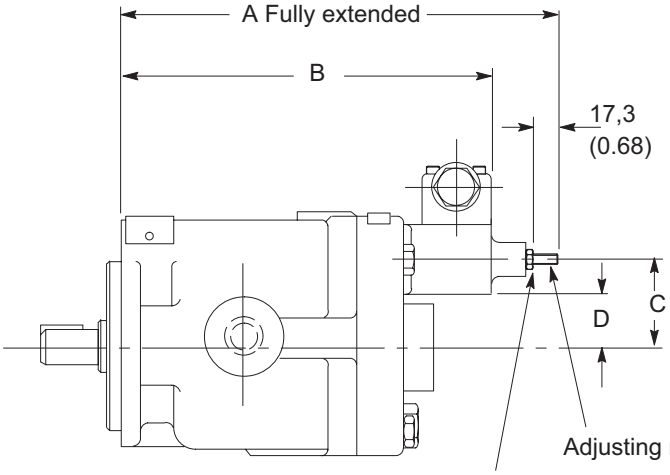

Minimum delivery position (screw flush with nut); do not adjust below flush.

Note.
Compensator position for:
PVB5/6-*LSY (LH rotation models) and
PVB10/15 -*RSY (RH rotation models)
PVB20/29 -**SY (RH and LH rotation models)

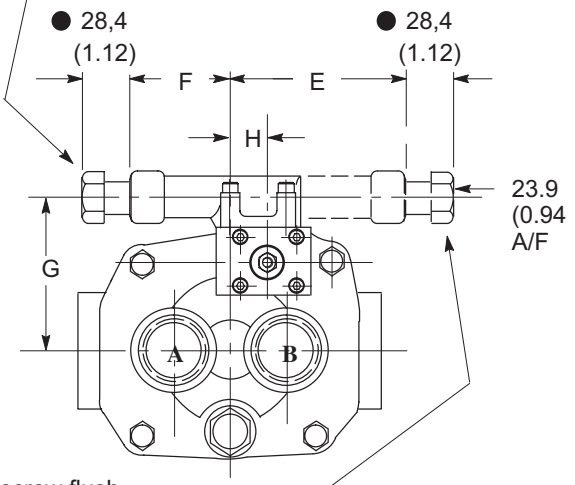

Note.
Compensator position for:
PVB5/6-*RSY (RH rotation models) and
PVB10/15 -*LSY (LH rotation models)

Pump type	A	B	C	D	E	F	G	H
PVB5/6	233 (9.17)	195 (7.68)	50 (1.97)	22,9 (0.9)	76,2 (3.0)	94,4 (3.72)	94,4 (3.72)	_
PVB10/15	266 (10.47)	226 (8.9)	52,3 (2.06)	25,1 (0.99)	118 (4.65)	70,8 (2.79)	90,2 (3.55)	23,8 (0.94)
PVB20/29	294 (11.56)	254 (10.0)	66,5 (2.62)	41,9 (1.65)	_	53,3 (2.1)	104,4 (4.11)	41,1 (1.62)

PVB5 to 29 with “CG” Remote Control of Compensator

Type “GEVS”

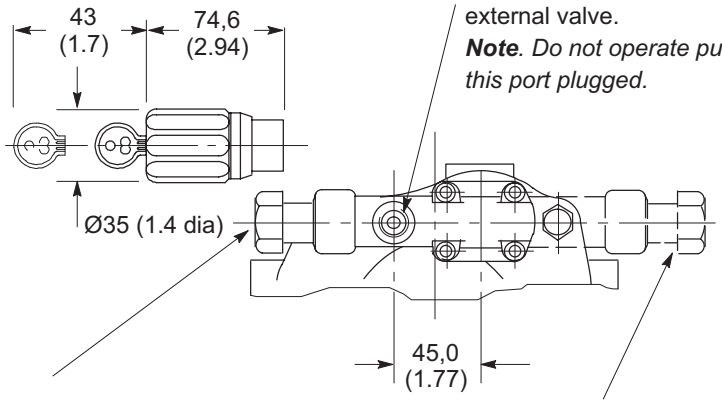

.4375-20UNF-2B thread for SAE “CG” control models, connect to external valve.
***Note**. Do not operate pump with this port plugged.*

Location as shown for:
PVB5/6 LH rotation models,
PVB10/15 RH rotation models and
PVB20/29 LH and RH rotation models.

Location as shown in dotted outline for:
PVB5/6 RH rotation models and
PVB10/15 LH rotation models.

Caution: Effective compensator setting will be compensator control setting **plus** remote relief valve setting.

Adjustment procedure

1. Turn remote pressure control (such as C-175) anti-clockwise to minimum setting.
2. Turn compensator adjustment plug to desired minimum pressure - 17 bar (250 psi) or higher.
3. Full pressure range can now be obtained with remote pressure control.

“CVP” Load Sensing with Pressure Limiter

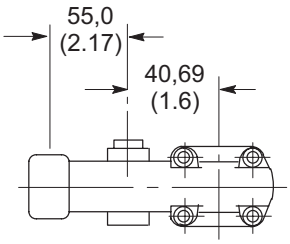

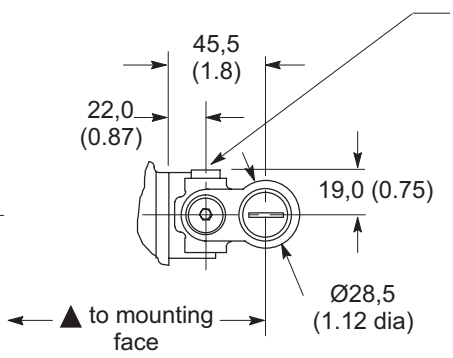

Load sensing control port:
.4375-20 UNF-2B thread for SAE O-ring fittings.

Location as shown for:
PVB5/6 LH rotation models,
PVB10/15 RH rotation models and
PVB20/29 LH and RH rotation models.

▲ PVB5/6 . . . . . 191 (7.51)
PVB10/15 . . . . . 222 (8.75)
PVB20/29 . . . . . 250 (9.84)

Vertical “Shaft-up” Installation - “S30” Drain Port Option for PVB5 to 29

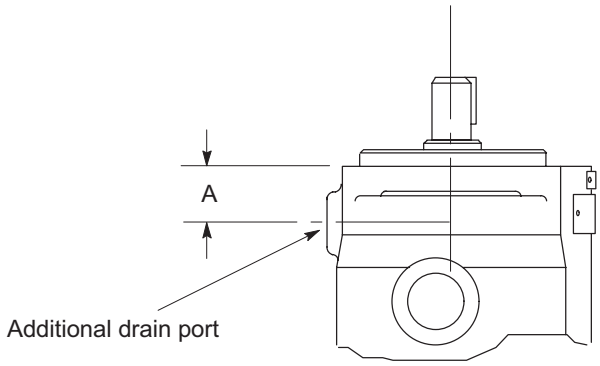

Pump type	Port tapping	A
PFB5	.562518UNF-2B	28,7 (3.85)
PVB5/6	.5625 18UNF-2B	19 (0.75)
PVB10/15	.7500 16UNF-2B	29,3 (1.15)
PVB20/29	.7500 16UNF-2B	38,9 (1.53)

PVB5/6; PVB10/15; PVB20/29 – DIN/ISO Models

For dimensions/data not shown refer to corresponding SAE models.

PVB5/6 – Pressure Compensated Control – “C” and “CM”

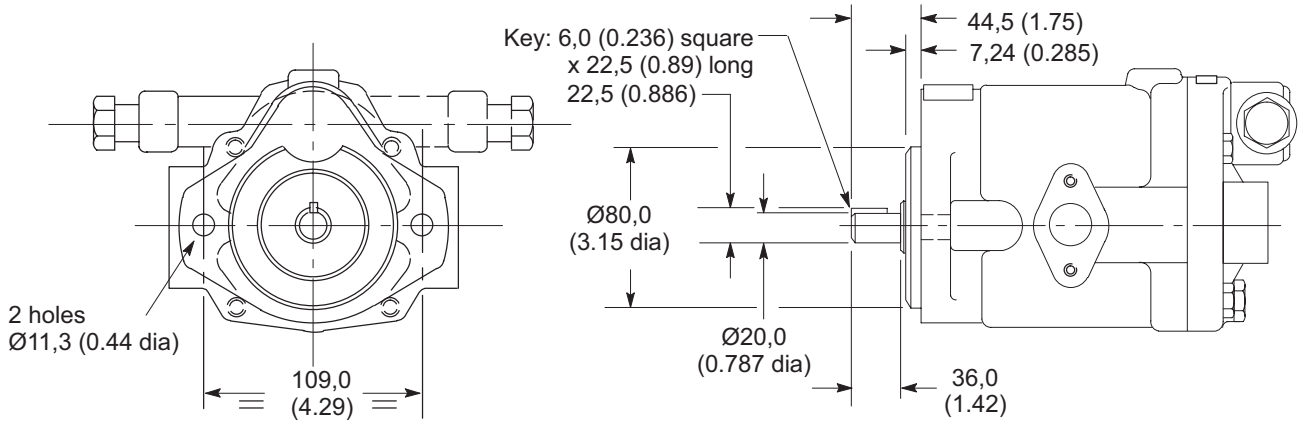

PVB10/15 – Pressure Compensated Control – “C” and “CM”

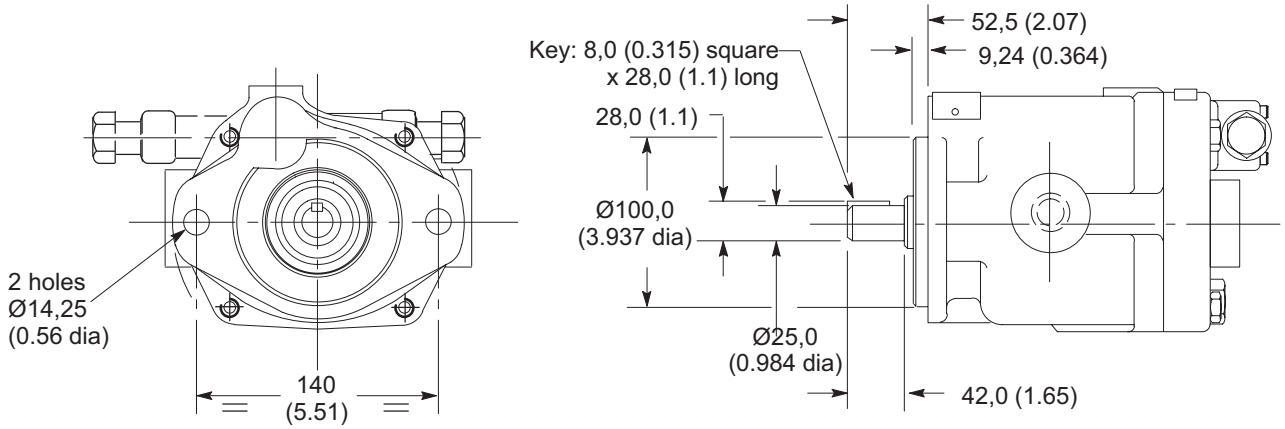

PVB20/29 – Pressure Compensated Control – “C” and “CM”

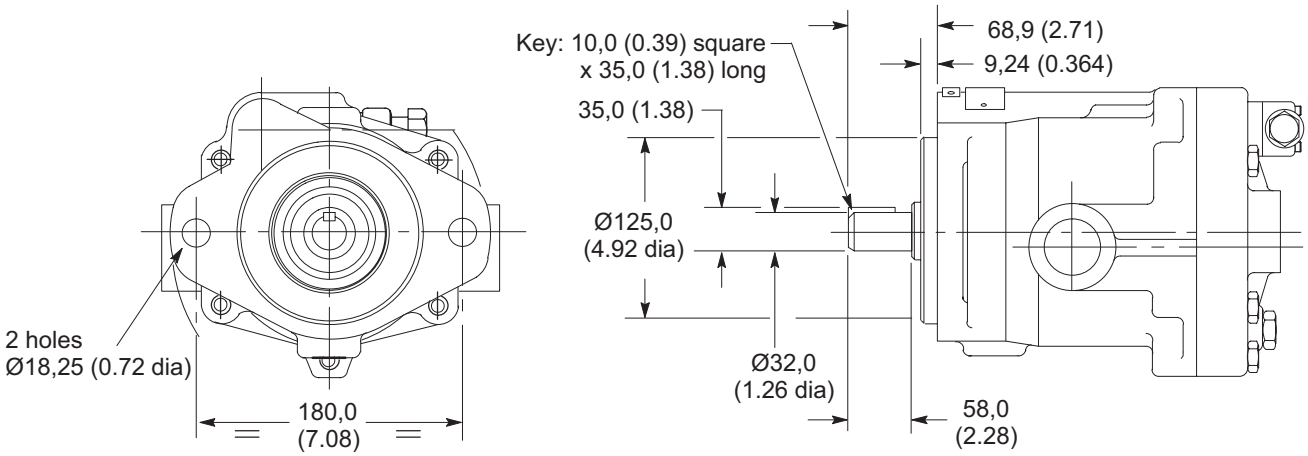

Mass, approx.

Flange Mounting Models

PFB5	5 kg (11 lb)
PFB10	10 kg (22 lb)
PFB20	19 kg (42 lb)
PVB5/6	8 kg (18 lb)
PVB10/15	15 kg (33 lb)
PVB20/29	26 kg (57 lb)
PVB45	96 kg* (211 lb)
PVB90	104 kg (230 lb)

** Also foot mounting models.*

▲ *Combined foot/flange mounting models.*

Foot Bracket Kits

FB-A-10	1,8 kg (4 lb)
FB-B-10	2,3 kg (5 lb)
FB-C-10	5,5 kg (12 lb)

Installation Data

Horizontal mounting is recommended to maintain necessary case fluid level. Vertical “shaft-up” installation is possible with pumps ordered to include the extra drain port denoted by the “S30” feature; see “Model Code”. In all cases the drain line must be full size, unrestricted and connected from the uppermost drain port directly to the reservoir in such a manner that the housing remains filled with fluid.

Piping of drain line must prevent siphoning. Pipe drain line so that it terminates below fluid level. No other lines are to be connected to this drain line.

Caution must be exercised to never exceed the following unit case pressures:

0,7 bar (10 psi) for PFB10 only.
0,35 bar (5psi) for all other models.

Starting

Before starting, fill case with system fluid through the uppermost drain port. Housing must be kept full at all times to provide internal lubrication. When first starting it may be necessary to bleed air from pump outlet to permit priming and to reduce noise. Bleed by loosening an outlet connection until a clear stream of fluid appears. An air bleed valve, ABS-03, is available for this purpose.